LOT 34 & PT LOTS 35 & 36 IN
OR 2525/1141 BEING PARCEL 1A
OCEAN BREEZE FARMS PBK 2/19

PR AMELIA ISLAND PROPCO LLC
C/O PGIM REAL ESTATE, ATTN FRANCES L FELICE
MADISON, NJ 07940

2023

00-00-30-044B-0034-0000

BUILDING CHARACTERISTICS

ELEMENT	CD	CONSTRUCTION
Exterior Wall	10	ABOVE AVG 100
Roof Structur	04	WOOD TRUSS 100
Roof Cover	03	COMP SHNGL 100
Interior Wall	05	DRYWALL 100
Interior Floo	07	CORK/VTILE 60
Interior Floo	14	CARPET 40
Ceiling	01	FIN.SUSPD 100
Air Condition	04	ROOF TOP 100
Heating Type	04	AIR DUCTED 100
Fixtures		100 100
Frame	02	WOOD FRAME 100
Story Height		13 100
RMS		15 100
Stories	2.	2. 100
Units		22 100
Occupancy	00	NONE 100
Quality	04	Quality Level 04
DOR CODE	0600	RETIREMENT HOMES
MAP NUM		MKT AREA 01
NEIGHBORHOOD/LOC	1079.00	

AREA TYPE	TOTAL GROSS AREA	PCT OF BASE	TOT ADJ AREA	SUBAREA MARKET VALUE
BAS	9,636	100	9,636	1,501,116
CAN	46	30	14	2,181
FUS	9,636	100	9,636	1,501,116
TOTALS	19,318		19,286	3,004,412

MARKET ADJUSTMENTS

TYPE	MDL	EFF. AREA	TOT ADJ PTS	EFF. BASE RATE	REPL. COST NEW	AYB	EYB	ECON	FNCT		NORM	% COND
7403	04	19,286	117.0358	160.60	3,097,332	2018	2018	0	0	0	3.00	97.00

1 ASSIST LIV – 0% - 0 Heated Area: 19272 HX Base Yr

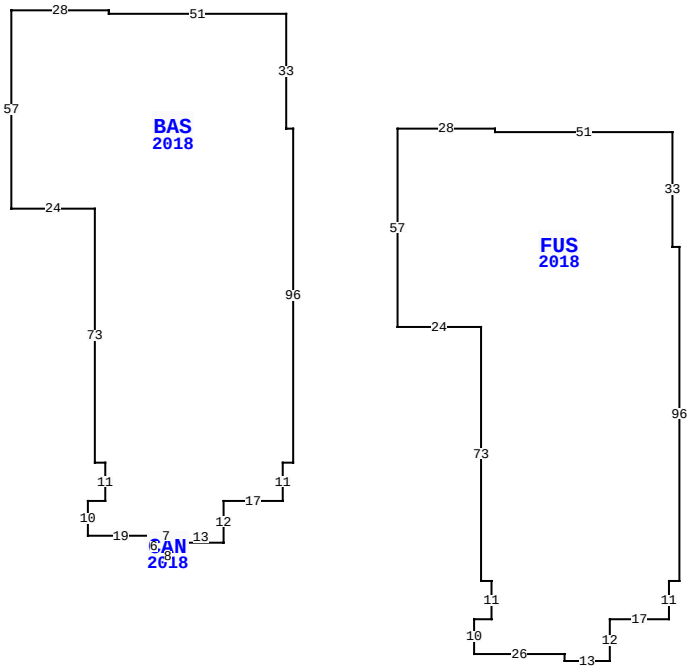

BLD DATE	07/31/2019 KK	LGL DATE	
XF DATE	07/31/2019 KK	LAND DATE	07/31/2019 KK
INC DATE		AG DATE	

AMELIA ISLAND PKWY, FERNANDINA BEACH

NASSAU COUNTY PROPERTY

VALUATION SUMMARY

VALUATION BY	STANDARD
Tax Group: 2	Tax Dist:
BUILDING MARKET VALUE	34,182,972
TOTAL MARKET OB/XF VALUE	1,641,374
TOTAL LAND VALUE - MARKET	2,790,000
TOTAL MARKET VALUE	38,614,346
SOH/AGL Deduction	0
ASSESSED VALUE	38,614,346
TOTAL EXEMPTION VALUE	0
BASE TAXABLE VALUE	38,614,346
TOTAL JUST VALUE	38,614,346
NCON VALUE	0
INCOME VALUE	
PREVIOUS YEAR MKT VALUE	35,563,161

PERMIT NUM	DESCRIPTION	AMT	ISSUED
20220308	AUTO GATE	0	10/07/2022
20182289	NEW CONST-DUPLEX	218,201	07/03/2018
20182291	NEW CONST-DUPLEX	218,201	07/03/2018
20182294	NEW CONST-DUPLEX	218,201	07/03/2018
20182296	NEW CONST-DUPLEX	218,201	07/03/2018
20182301	NEW CONST-DUPLEX	218,201	07/03/2018

SALES DATA

OFF RECORD Number	DATE	TYPE INST	Q U	V I	RSN CD	SALE PRICE
2525/1141	12/23/2021	SW	Q	I	05	58,457,800
GRANTOR: THE ASPIRE AT AMELIA						
GRANTEE: PR AMELIA ISLAND PR						
2088/0068	12/07/2016	SW	Q	V	05	2,240,000
GRANTOR: AMELIA HOLDING LLC						
GRANTEE: THE ASPIRE AT AMELI						

BUILDING NOTES

BUILDING DIMENSIONS

BAS=[YR=2018] W2 N33 W51 N1 W28 S57 E24 S73 E3 S11 W5 S10 E19 CAN=[YR=2018] S6 E8 N4 W1 N2 W7$ E7 S2 E13 N12 E17 N11 E3 N96$ PTR= E30 FUS=[YR=2018] E28 S1 E51 S33 E2 S96 W3 S11 W17 S12 W13 N2 W26 N10 E5 N11 W3 N73 W24 N57$ W30$.

EXTRA FEATURES

LN	OB/XF CODE	DESCRIPTION	BLD	CAP	L	W	UNITS	UT	Adj R	ADJ UNIT PRICE	ORIG COND	YEAR ON	YEAR ACTUAL	Q	% COND	OB/XF MKT VALUE	NOTES
1	0803	ASPHALT C	0	0	0	0	14,467.00	SF	2.00	2.00	100	2018	2018	3	84	24,305	
2	0400	CONC CURB	0	0	0	0	1,323.00	LF	15.00	15.00	100	2018	2018	3	99	19,647	
3	0972	ST LGHT UN	0	0	0	0	3.00	UT	2,530.00	2,530.00	100	2018	2018	3	95	7,211	
4	0422	CL FNC 4'	0	0	0	0	748.00	LF	15.00	15.00	100	2018	2018	3	95	10,659	
5	0462	ST/AL FNC	0	0	0	0	832.00	SF	10.00	10.00	100	2018	2018	3	90	7,488	
6	0812	CONCRETE C	0	0	0	0	4,749.00	SF	4.00	4.00	100	2018	2018	3	98	18,616	
7	1076	TRELLIS A	0	0	8	8	64.00	SF	7.50	7.50	100	2019	2019	3	93	446	
8	0810	CONCRETE A	0	0	10	10	100.00	SF	6.50	6.50	100	2018	2018	3	98	637	
9	0462	ST/AL FNC	0	0	0	0	928.00	SF	10.00	10.00	100	2018	2018	3	90	8,352	
10	0400	CONC CURB	0	0	0	0	20.00	LF	15.00	15.00	100	2018	2018	3	99	297	

TOTAL OB/XF 97,658

LAND DESCRIPTION

LN	USE CODE	CLS	LAND USE DESCRIPTION	CAP	RD	LOC ZONE	FRONT	DEPTH	TOT LND UTS	UNIT TYPE	DT	DPTH FACT	% COND	TOT ADJ	UNIT PRICE	ADJ UNIT PRICE	LAND VALUE	OTHER ADJUSTMENTS AND NOTES	YEAR	DENSITY	DECL	FRZ	YR	CONSRV
1	000600	C	RETIREMENT	0			0.00	0.00	11.16	AC		1.00	1.00	1.00	250,000.00	250,000.00	2,790,000							

REVIEW DATE 07/31/2019 BY KK Total Acres: 11.16 Total Land Value: 2,790,000 Market: 0 Agricultural: 0 Common: 2,790,000 PRINTED 08/02/2023 BY SYS

LOT 34 & PT LOTS 35 & 36 IN
OR 2525/1141 BEING PARCEL 1A
OCEAN BREEZE FARMS PBK 2/19

PR AMELIA ISLAND PROPCO LLC
C/O PGIM REAL ESTATE, ATTN FRANCES L FELICE
MADISON, NJ 07940

2023

00-00-30-044B-0034-0000

NASSAU COUNTY PROPERTY

BUILDING CHARACTERISTICS

ELEMENT	CD	CONSTRUCTION
Exterior Wall	10	ABOVE AVG 100
Roof Structur	04	WOOD TRUSS 100
Roof Cover	03	COMP SHNGL 50
Roof Cover	04	BUILT-UP 50
Interior Wall	05	DRYWALL 100
Interior Floo	07	CORK/VTILE 60
Interior Floo	14	CARPET 40
Ceiling	01	FIN.SUSPD 100
Air Condition	04	ROOF TOP 100
Heating Type	04	AIR DUCTED 100
Fixtures		76 100
Frame	02	WOOD FRAME 100
Story Height		13 100
RMS		37 100
Stories	2.	2. 100
Units		15 100
Occupancy	00	NONE 100
Quality	04	Quality Level 04
DOR CODE	0600	RETIREMENT HOMES
MAP NUM		MKT AREA 01
NEIGHBORHOOD/LOC	1079.00	

AREA TYPE	TOTAL GROSS AREA	PCT OF BASE	TOT ADJ AREA	SUBAREA MARKET VALUE
BAS	12,615	100	12,615	1,893,606
CAN	240	30	72	10,808
FSP	390	50	195	29,271
FSP	460	50	230	34,525
FUS	12,017	100	12,017	1,803,842
TOTALS	25,722		25,129	3,772,052

MARKET ADJUSTMENTS

TYPE	MDL	EFF. AREA	TOT ADJ PTS	EFF. BASE RATE	REPL. COST NEW	AYB	EYB	ECON	FNCT		NORM	% COND
7403	04	25,129	112.7722	154.75	3,888,713	2018	2018	0	0	0	3.00	97.00

2 ASSIST LIV - 0% - 0 Heated Area: 24632 HX Base Yr

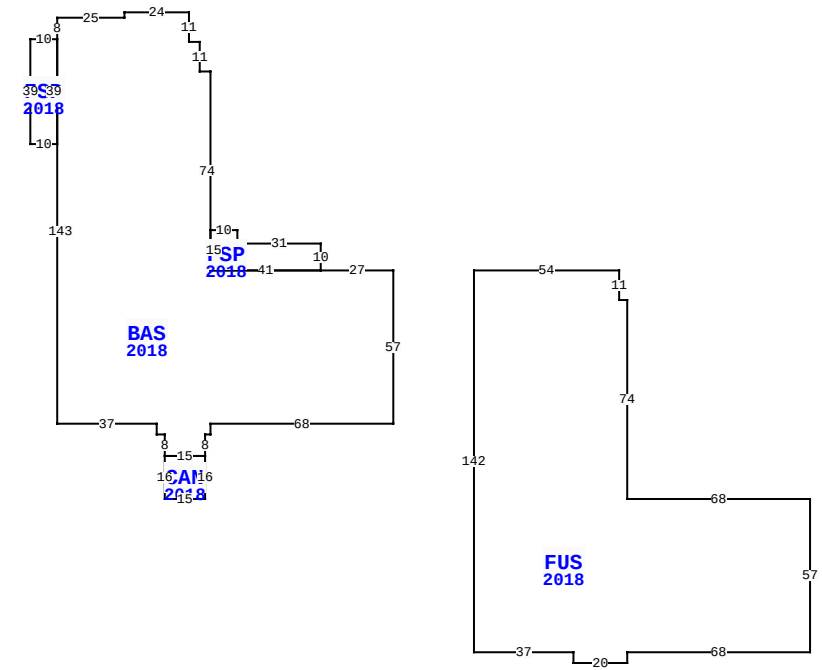

AMELIA ISLAND PKWY, FERNANDINA BEACH

BLD DATE	07/31/2019	KK	LGL DATE	
XF DATE	07/31/2019	KK	LAND DATE	07/31/2019 KK
INC DATE			AG DATE	

NASSAU COUNTY PROPERTY — VALUATION SUMMARY

VALUATION BY	STANDARD
Tax Group: 2	Tax Dist:
BUILDING MARKET VALUE	34,182,972
TOTAL MARKET OB/XF VALUE	1,641,374
TOTAL LAND VALUE - MARKET	2,790,000
TOTAL MARKET VALUE	38,614,346
SOH/AGL Deduction	0
ASSESSED VALUE	38,614,346
TOTAL EXEMPTION VALUE	0
BASE TAXABLE VALUE	38,614,346
TOTAL JUST VALUE	38,614,346
NCON VALUE	0
INCOME VALUE	
PREVIOUS YEAR MKT VALUE	35,563,161

PERMIT NUM	DESCRIPTION	AMT	ISSUED
20182304	NEW CONST-DUPLEX	218,201	07/03/2018
20182285	NEW CONST-DUPLEX	218,201	07/02/2018
20182287	NEW CONST DUPLEX-	218,201	07/02/2018
20182189	NEW CONST-DUPLEX	218,201	06/27/2018
20182191	NEW CONST-DUPLEX	218,201	06/27/2018
20182195	NEW CONST-DUPLEX	218,201	06/20/2018

SALES DATA

OFF RECORD Number	DATE	TYPE INST	Q U	V I	RSN CD	SALE PRICE
2525/1141	12/23/2021	SW	Q	I	05	58,457,800
GRANTOR: THE ASPIRE AT AMELIA						
GRANTEE: PR AMELIA ISLAND PR						
2088/0068	12/07/2016	SW	Q	V	05	2,240,000
GRANTOR: AMELIA HOLDING LLC						
GRANTEE: THE ASPIRE AT AMELI						

BUILDING NOTES

BUILDING DIMENSIONS

BAS=[YR=2018] W27 FSP=[YR=2018] N10 W31 N5 W10 S15 E41$ W41 N74 W4 N11 W4 N11 W24 S2 W25 S8 FSP=[YR=2018] W10 S39 E10 N39$ S143 E37 S4 E3 S8 CAN=[YR=2018] S16 E15 N16 W15 $ E15 N8 E2 N4 E68 N57$ PTR= E30 FUS=[YR=2018] E54 S11 E3 S74 E68 S57 W68 S4 W20 N4 W37 N142 $ W30$.

EXTRA FEATURES

L N	OB/XF CODE	DESCRIPTION	BLD	CAP	L	W	UNITS	UT	Adj R	ADJ UNIT PRICE	ORIG COND	YEAR ON	YEAR ACTUAL	Q	% COND	OB/XF MKT VALUE	NOTES
11	0803	ASPHALT C	0	0	0	0	19,491.00	SF	2.00	2.00	100	2018	2018	3	84	32,745	
12	0856	POROUS CC	0	0	0	0	10,355.00	SF	2.50	2.50	100	2018	2018	3	98	25,370	
13	0810	CONCRETE A	0	0	0	0	363.00	SF	6.50	6.50	100	2018	2018	3	98	2,312	
14	0972	ST LGHT UN	0	0	0	0	6.00	UT	2,530.00	2,530.00	100	2018	2018	3	95	14,421	
15	0400	CONC CURB	0	0	0	0	1,861.00	LF	15.00	15.00	100	2018	2018	3	99	27,636	
16	0812	CONCRETE C	0	0	0	0	3,269.00	SF	4.00	4.00	100	2018	2018	3	98	12,814	
17	0811	CONCRETE B	0	0	28	18	504.00	SF	5.20	5.20	100	2018	2018	3	98	2,568	
18	0402	CONC BUMPE	0	0	0	0	2.00	UT	25.00	25.00	100	2018	2018	3	99	50	
19	0402	CONC BUMPE	0	0	0	0	2.00	UT	25.00	25.00	100	2018	2018	3	99	50	
20	0810	CONCRETE A	0	0	0	0	420.00	SF	6.50	6.50	100	2018	2018	3	98	2,675	

TOTAL OB/XF 120,641

LAND DESCRIPTION

L N	USE CODE	CLS	LAND USE DESCRIPTION	CAP	R D	LOC ZONE	FRONT	DEPTH	TOT LND UTS	UNIT TYPE	D T	DPTH FACT	% COND	TOT ADJ	UNIT PRICE	ADJ UNIT PRICE	LAND VALUE	OTHER ADJUSTMENTS AND NOTES	YEAR	DENSITY	DECL	FRZ	YR	CONSRV

REVIEW DATE 07/31/2019 BY KK Total Acres: 11.16 Total Land Value: 2,790,000 Market: 0 Agricultural: 0 Common: 2,790,000 PRINTED 08/02/2023 BY SYS

LOT 34 & PT LOTS 35 & 36 IN
OR 2525/1141 BEING PARCEL 1A
OCEAN BREEZE FARMS PBK 2/19

PR AMELIA ISLAND PROPCO LLC
C/O PGIM REAL ESTATE, ATTN FRANCES L FELICE
MADISON, NJ 07940

2023

00-00-30-044B-0034-0000

NASSAU COUNTY PROPERTY

BUILDING CHARACTERISTICS

ELEMENT	CD	CONSTRUCTION
Exterior Wall	10	ABOVE AVG 100
Roof Structur	04	WOOD TRUSS 100
Roof Cover	03	COMP SHNGL 90
Roof Cover	04	BUILT-UP 10
Interior Wall	05	DRYWALL 100
Interior Floo	07	CORK/VTILE 60
Interior Floo	14	CARPET 40
Ceiling	01	FIN.SUSPD 100
Air Condition	04	ROOF TOP 100
Heating Type	04	AIR DUCTED 100
Fixtures		116 100
Frame	02	WOOD FRAME 100
Story Height		13 100
RMS		17 100
Stories	2.	2. 100
Units		32 100
Occupancy	00	NONE 100
Quality	04	Quality Level 04
DOR CODE	0600	RETIREMENT HOMES
MAP NUM		MKT AREA 01
NEIGHBORHOOD/LOC	1079.00	

AREA TYPE	TOTAL GROSS AREA	PCT OF BASE	TOT ADJ AREA	SUBAREA MARKET VALUE
BAS	11,088	100	11,088	1,727,311
CAN	42	30	13	2,025
CAN	42	30	13	2,025
FUS	11,177	100	11,177	1,741,175
TOTALS	22,349		22,291	3,472,537

MARKET ADJUSTMENTS

TYPE	MDL	EFF. AREA	TOT ADJ PTS	EFF. BASE RATE	REPL. COST NEW	AYB	EYB	ECON	FNCT		NORM	% COND
7403	04	22,291	117.0358	160.60	3,579,935	2018	2018	0	0	0	3.00	97.00

3 ASSIST LIV – 0% - 0 Heated Area: 22265 HX Base Yr

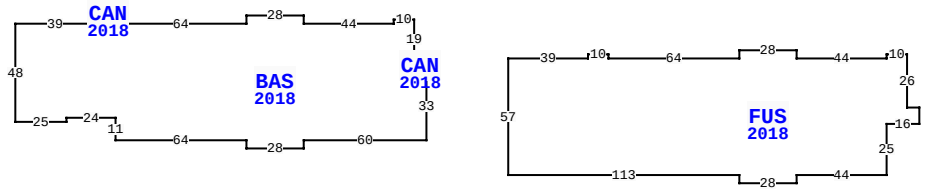

AMELIA ISLAND PKWY, FERNANDINA BEACH

BLD DATE	07/31/2019	KK	LGL DATE	
XF DATE	07/31/2019	KK	LAND DATE	07/31/2019 KK
INC DATE			AG DATE	

EXTRA FEATURES

LN	OB/XF CODE	DESCRIPTION	BLD	CAP	L	W	UNITS	UT	Adj R	ADJ UNIT PRICE	ORIG COND	YEAR ON	YEAR ACTUAL	Q	% COND	OB/XF MKT VALUE	NOTES
21	0811	CONCRETE B	0	0	0	0	954.00	SF	5.20	5.20	100	2018	2018	3	98	4,862	
22	0803	ASPHALT C	0	0	0	0	4,459.00	SF	2.00	2.00	100	2018	2018	3	84	7,491	
23	0400	CONC CURB	0	0	0	0	296.00	LF	15.00	15.00	100	2018	2018	3	99	4,396	
24	4950	BOLLARD	0	0	0	0	14.00	UT	100.00	100.00	100	2018	2018	3	100	1,400	
25	0819	CONC 12"	0	0	26	13	338.00	SF	9.50	9.50	100	2018	2018	3	98	3,147	
26	0464	FNC GT 10'	0	0	0	0	2.00	UT	525.00	525.00	100	2018	2018	3	95	998	
27	0350	CARPORT WD	0	0	22	12	264.00	SF	13.00	13.00	100	2018	2018	3	86	2,952	
28	0464	FNC GT 10'	0	0	0	0	2.00	UT	525.00	525.00	100	2018	2018	3	95	998	
29	0810	CONCRETE A	0	0	21	9	189.00	SF	6.50	6.50	100	2018	2018	3	98	1,204	
30	0462	ST/AL FNC	0	0	84	4	336.00	SF	10.00	10.00	100	2018	2018	3	90	3,024	

VALUATION SUMMARY

VALUATION BY	STANDARD
Tax Group: 2	Tax Dist:
BUILDING MARKET VALUE	34,182,972
TOTAL MARKET OB/XF VALUE	1,641,374
TOTAL LAND VALUE - MARKET	2,790,000
TOTAL MARKET VALUE	38,614,346
SOH/AGL Deduction	0
ASSESSED VALUE	38,614,346
TOTAL EXEMPTION VALUE	0
BASE TAXABLE VALUE	38,614,346
TOTAL JUST VALUE	38,614,346
NCON VALUE	0
INCOME VALUE	
PREVIOUS YEAR MKT VALUE	35,563,161

PERMIT NUM	DESCRIPTION	AMT	ISSUED
20182196	NEW CONST-DUPLEX	218,201	06/20/2018
20182198	NEW CONST-DUPLEX	218,201	06/20/2018
20182202	NEW CONST-DUPLEX	218,201	06/20/2018
20182205	NEW CONST-DUPLEX	218,201	06/20/2018
20182206	NEW CONST-DUPLEX	218,201	06/20/2018
20182208	NEW CONST-DUPLEX	218,201	06/20/2018

SALES DATA

OFF RECORD Number	DATE	TYPE INST	Q U	V I	RSN CD	SALE PRICE
2525/1141	12/23/2021	SW	Q	I	05	58,457,800
GRANTOR: THE ASPIRE AT AMELIA						
GRANTEE: PR AMELIA ISLAND PR						
2088/0068	12/07/2016	SW	Q	V	05	2,240,000
GRANTOR: AMELIA HOLDING LLC						
GRANTEE: THE ASPIRE AT AMELI						

BUILDING NOTES

BUILDING DIMENSIONS

CAN=[YR=2018] W6 BAS=[YR=2018] N19 W10 S2 W44 N4 W28 S4 W64 N2 CAN=[YR=2018] N6 W7 S6 E7$ W10 S2 W39 S48 E25 N2 E24 S11 E64 S4 E28 N4 E60 N33 W6 N7$ S7 E6 N7 $ PTR= E40
FUS=[YR=2018] E39 N2 E10 S2 E64 N4 E28 S4 E44 N2 E10 S26 E6 S8 W16 S25 W44 S4 W28 N4 W113 N57$ W40$.

LAND DESCRIPTION

TOTAL OB/XF 30,472

LN	USE CODE	CLS	LAND USE DESCRIPTION	CAP	RD	LOC ZONE	FRONT	DEPTH	TOT LND UTS	UNIT TYPE	DT	DPTH FACT	% COND	TOT ADJ	UNIT PRICE	ADJ UNIT PRICE	LAND VALUE	OTHER ADJUSTMENTS AND NOTES	YEAR	DENSITY	DECL	FRZ	YR	CONSRV

REVIEW DATE 07/31/2019 BY KK Total Acres: 11.16 Total Land Value: 2,790,000 Market: 0 Agricultural: 0 Common: 2,790,000 PRINTED 08/02/2023 BY SYS

LOT 34 & PT LOTS 35 & 36 IN
OR 2525/1141 BEING PARCEL 1A
OCEAN BREEZE FARMS PBK 2/19

PR AMELIA ISLAND PROPCO LLC
C/O PGIM REAL ESTATE, ATTN FRANCES L FELICE
MADISON, NJ 07940

2023

00-00-30-044B-0034-0000

BUILDING CHARACTERISTICS

ELEMENT	CD	CONSTRUCTION
Exterior Wall	10	ABOVE AVG 100
Roof Structur	04	WOOD TRUSS 100
Roof Cover	03	COMP SHNGL 50
Roof Cover	04	BUILT-UP 50
Interior Wall	05	DRYWALL 100
Interior Floo	07	CORK/VTILE 60
Interior Floo	14	CARPET 40
Ceiling	01	FIN.SUSPD 100
Air Condition	04	ROOF TOP 100
Heating Type	04	AIR DUCTED 100
Fixtures		90 100
Frame	02	WOOD FRAME 100
Story Height		13 100
RMS		30 100
Stories	2.	2. 100
Units		7 100
Occupancy	00	NONE 100
Quality	04	Quality Level 04
DOR CODE	0600	RETIREMENT HOMES
MAP NUM		MKT AREA 01
NEIGHBORHOOD/LOC	1079.00	

AREA TYPE	TOTAL GROSS AREA	PCT OF BASE	TOT ADJ AREA	SUBAREA MARKET VALUE
BAS	12,470	100	12,470	1,889,501
CAN	50	30	15	2,273
CAN	143	30	43	6,515
CAN	888	30	266	40,305
FSP	148	50	74	11,213
FSP	148	50	74	11,213
FSP	252	50	126	19,092
FSP	564	50	282	42,729
FSP	888	50	444	67,276
FST	12	50	6	909
TOTALS	28,289		26,098	3,954,466

MARKET ADJUSTMENTS

TYPE	MDL	EFF. AREA	TOT ADJ PTS	EFF. BASE RATE	REPL. COST NEW	AYB	EYB	ECON	FNCT		NORM	% COND
7403	04	26,098	113.8381	156.21	4,076,769	2018	2018	0	0	0	3.00	97.00

4 ASSIST LIV – 0% - 0 Heated Area: 24562 HX Base Yr

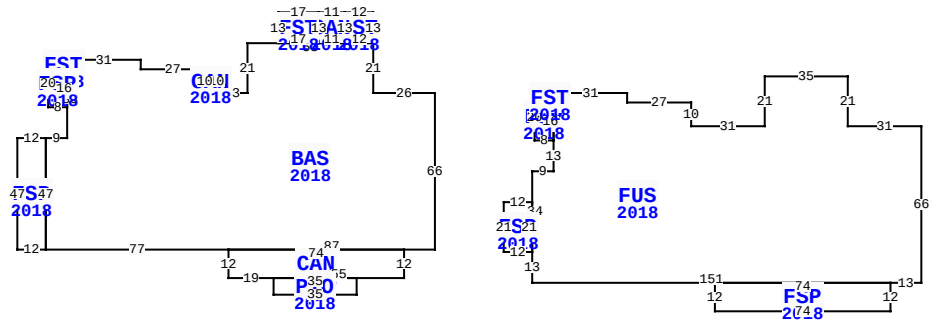

** This building has 15 Sub-Areas

AMELIA ISLAND PKWY, FERNANDINA BEACH

BLD DATE	07/31/2019	KK	LGL DATE	
XF DATE	07/31/2019	KK	LAND DATE	07/31/2019 KK
INC DATE			AG DATE	

NASSAU COUNTY PROPERTY

VALUATION SUMMARY

VALUATION BY	STANDARD
Tax Group: 2	Tax Dist:
BUILDING MARKET VALUE	34,182,972
TOTAL MARKET OB/XF VALUE	1,641,374
TOTAL LAND VALUE - MARKET	2,790,000
TOTAL MARKET VALUE	38,614,346
SOH/AGL Deduction	0
ASSESSED VALUE	38,614,346
TOTAL EXEMPTION VALUE	0
BASE TAXABLE VALUE	38,614,346
TOTAL JUST VALUE	38,614,346
NCON VALUE	0
INCOME VALUE	
PREVIOUS YEAR MKT VALUE	35,563,161

PERMIT NUM	DESCRIPTION	AMT	ISSUED
20182213	NEW CONST-DUPLEX	218,201	06/20/2018
20182214	NEW CONST-DUPLEX	218,201	06/20/2018
20182219	NEW CONST-DUPLEX	218,201	06/20/2018
20180572	NEW CONSTR - ROOF	467,180	02/16/2018
20180128	FIRE ALARM SYSTEM	215,929	01/12/2018
20173915	FIRE ALARM SYSTEM	534,230	12/12/2017

SALES DATA

OFF RECORD Number	DATE	TYPE INST	Q U	V I	RSN CD	SALE PRICE
2525/1141	12/23/2021	SW	Q	I	05	58,457,800
GRANTOR: THE ASPIRE AT AMELIA						
GRANTEE: PR AMELIA ISLAND PR						
2088/0068	12/07/2016	SW	Q	V	05	2,240,000
GRANTOR: AMELIA HOLDING LLC						
GRANTEE: THE ASPIRE AT AMELI						

BUILDING NOTES

BUILDING DIMENSIONS

BAS=[YR=2018] W26 N21 FST=[YR=2018] N13 W12 CAN=[YR=2018] W11 FST=[YR=2018] W17 S13 E17 N13$ S13 E11 N13$ S13 E12$ W53 S21 W13 CAN=[YR=2018] N10 W5 S10 E5$ W5 N10 W27 N4 W31 FST=[YR=2018] W3 FSP=[YR=2018] W5 S20 E8 N16 W3 N4$ S4 E3 N4$ S33 W9 FSP=[YR=2018] W12 S47 E12 N47$ S47 E77 CAN=[YR=2018] S12 E19 PTO=[YR=2018] S7 E35 N7 W35$ E55 N12 W74$ E87 N66$ PTR= E50 FUS=[YR=2018] E31 S4 E27 S10 E31 N21 E35 S21 E31 S66 W13 FSP=[YR=2018] S12 W74 N12 E74$ W151 N13 FSP=[YR=2018] W12 N21 E12 S21$ N34 E9 N13 FSP=[YR=2018] W8 N20 E5 FST=[YR=2018] E3 S4 W3 N4 $ S4 E3 S16$ N20$ W50$.

EXTRA FEATURES

LN	OB/XF CODE	DESCRIPTION	BLD	CAP	L	W	UNITS	UT	Adj R	ADJ UNIT PRICE	ORIG COND	YEAR ON	YEAR ACTUAL	Q	% COND	OB/XF MKT VALUE	NOTES
31	1076	TRELLIS A	0	0	12	12	144.00	SF	7.50	7.50	100	2018	2018	3	90	972	
32	0812	CONCRETE C	0	0	0	0	4,060.00	SF	4.00	4.00	100	2018	2018	3	98	15,915	
33	0648	LIGHTS-AV	0	0	0	0	25.00	UT	140.00	140.00	100	2018	2018	3	86	3,010	
34	0648	LIGHTS-AV	0	0	0	0	27.00	UT	84.00	84.00	100	2018	2018	3	86	1,950	
35	0430	CL FNC 6B	0	0	0	0	65.00	LF	9.70	9.70	100	2018	2018	3	95	599	
36	0463	FENCE GATE	0	0	0	0	2.00	UT	300.00	300.00	100	2018	2018	3	95	570	
37	0810	CONCRETE A	0	0	0	0	361.00	SF	6.50	6.50	100	2018	2018	3	98	2,300	
38	0803	ASPHALT C	0	0	0	0	18,560.00	SF	2.00	2.00	100	2018	2018	3	84	31,181	
39	0803	ASPHALT C	0	0	0	0	3,830.00	SF	2.00	2.00	100	2018	2018	3	84	6,434	
40	0812	CONCRETE C	0	0	0	0	1,579.00	SF	4.00	4.00	100	2018	2018	3	98	6,190	

TOTAL OB/XF 69,121

LAND DESCRIPTION

LN	USE CODE	CLS	LAND USE DESCRIPTION	CAP	RD	LOC ZONE	FRONT	DEPTH	TOT LND UTS	UNIT TYPE	DT	DPTH FACT	% COND	TOT ADJ	UNIT PRICE	ADJ UNIT PRICE	LAND VALUE	OTHER ADJUSTMENTS AND NOTES	YEAR	DENSITY	DECL	FRZ	YR	CONSRV

REVIEW DATE 07/31/2019 BY KK Total Acres: 11.16 Total Land Value: 2,790,000 Market: 0 Agricultural: 0 Common: 2,790,000 PRINTED 08/02/2023 BY SYS

LOT 34 & PT LOTS 35 & 36 IN
OR 2525/1141 BEING PARCEL 1A
OCEAN BREEZE FARMS PBK 2/19

PR AMELIA ISLAND PROPCO LLC
C/O PGIM REAL ESTATE, ATTN FRANCES L FELICE
MADISON, NJ 07940

2023

00-00-30-044B-0034-0000

NASSAU COUNTY PROPERTY

BUILDING CHARACTERISTICS

ELEMENT	CD	CONSTRUCTION
Exterior Wall	10	ABOVE AVG 100
Roof Structur	04	WOOD TRUSS 100
Roof Cover	03	COMP SHNGL 80
Roof Cover	04	BUILT-UP 20
Interior Wall	05	DRYWALL 100
Interior Floo	07	CORK/VTILE 60
Interior Floo	14	CARPET 40
Ceiling	01	FIN.SUSPD 100
Air Condition	04	ROOF TOP 100
Heating Type	04	AIR DUCTED 100
Fixtures		55 100
Frame	02	WOOD FRAME 100
Story Height		13 100
RMS		38 100
Stories	1.	1. 100
Units		7 100
Occupancy	00	NONE 100
Quality	04	Quality Level 04
DOR CODE	0600	RETIREMENT HOMES
MAP NUM		MKT AREA 01
NEIGHBORHOOD/LOC	1079.00	

AREA TYPE	TOTAL GROSS AREA	PCT OF BASE	TOT ADJ AREA	SUBAREA MARKET VALUE
BAS	7,709	100	7,709	1,203,915
CAN	726	30	218	34,045
FSP	144	50	72	11,244
FSP	148	50	74	11,557
FSP	148	50	74	11,557
FSP	156	50	78	12,181
FST	12	50	6	937
FST	12	50	6	937
FST	12	50	6	937
FUS	6,306	100	6,306	984,808
TOTALS	15,823		14,571	2,275,553

MARKET ADJUSTMENTS

TYPE	MDL	EFF. AREA	TOT ADJ PTS	EFF. BASE RATE	REPL. COST NEW	AYB	EYB	ECON	FNCT		NORM	% COND
7403	04	14,571	117.3231	161.00	2,345,931	2018	2018	0	0	0	3.00	97.00

5 ASSIST LIV – 0% - 0 Heated Area: 14015 HX Base Yr

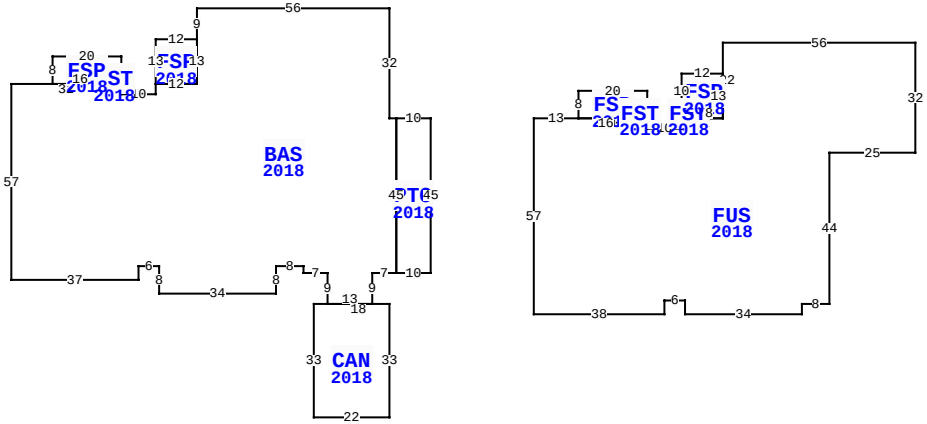

** This building has 11 Sub-Areas

AMELIA ISLAND PKWY, FERNANDINA BEACH

BLD DATE	07/31/2019	KK	LGL DATE	
XF DATE	07/31/2019	KK	LAND DATE	07/31/2019 KK
INC DATE			AG DATE	

VALUATION SUMMARY

VALUATION BY	STANDARD
Tax Group: 2	Tax Dist:
BUILDING MARKET VALUE	34,182,972
TOTAL MARKET OB/XF VALUE	1,641,374
TOTAL LAND VALUE - MARKET	2,790,000
TOTAL MARKET VALUE	38,614,346
SOH/AGL Deduction	0
ASSESSED VALUE	38,614,346
TOTAL EXEMPTION VALUE	0
BASE TAXABLE VALUE	38,614,346
TOTAL JUST VALUE	38,614,346
NCON VALUE	0
INCOME VALUE	
PREVIOUS YEAR MKT VALUE	35,563,161

PERMIT NUM	DESCRIPTION	AMT	ISSUED
20173795	SWIM POOL	104,478	12/04/2017
20173400	NEW CONSTR	1,750,000	11/01/2017
20173065	NEW CONSTR	27,086,382	10/06/2017
20172680	NEW CONSTR	268,885	08/28/2017
20172635	NEW CONSTR	1,409,000	08/23/2017
20172559	FOUNDATION	949,000	08/18/2017

SALES DATA

OFF RECORD Number	DATE	TYPE INST	Q U	V I	RSN CD	SALE PRICE
2525/1141	12/23/2021	SW	Q	I	05	58,457,800
GRANTOR: THE ASPIRE AT AMELIA						
GRANTEE: PR AMELIA ISLAND PR						
2088/0068	12/07/2016	SW	Q	V	05	2,240,000
GRANTOR: AMELIA HOLDING LLC						
GRANTEE: THE ASPIRE AT AMELI						

BUILDING NOTES

BUILDING DIMENSIONS

PTO=[YR=2018] W10 BAS=[YR=2018] W2 N32 W56 S9 FSP=[YR=2018] W12 S13 E12 N13$ S13 W12 S3 W10 N3 FST=[YR=2018] N3 FSP=[YR=2018] N5 W20 S8 E16 N3 E4$ W4 S3 E4$ W32 S57 E37 N4 E6 S8 E34 N8 E8 S2 E7 S9 CAN=[YR=2018] W4 S33 E22 N33 W18 $ E13 N9 E7 N45$ S45 E10 N45$ PTR=E30 FUS=[YR=2018] E13 FSP=[YR=2018] N8 E20 S5 FST=[YR=2018] S3 W4 N3 E4 $ W4 S3 W16$ E20 S3 E10 N3 FST=[YR=2018] N3 FSP=[YR=2018] N10 E12 S13 W8 N3 W4$ E4 S3 W4$ E12 N22 E56 S32 W25 S44 W8 S3 W34 N4 W6 S4 W38 N57$ W30$.

EXTRA FEATURES

LN	OB/XF CODE	DESCRIPTION	BLD	CAP	L	W	UNITS	UT	Adj R	ADJ UNIT PRICE	ORIG COND	YEAR ON	YEAR ACTUAL	Q	% COND	OB/XF MKT VALUE	NOTES
41	0400	CONC CURB	0	0	0	0	226.00	LF	15.00	15.00	100	2018	2018	3	99	3,356	
42	0400	CONC CURB	0	0	0	0	847.00	LF	15.00	15.00	100	2018	2018	3	99	12,578	
43	0856	POROUS CC	0	0	0	0	4,041.00	SF	2.50	2.50	100	2018	2018	3	98	9,900	
44	0810	CONCRETE A	0	0	0	0	137.00	SF	6.50	6.50	100	2018	2018	3	98	873	
45	0812	CONCRETE C	0	0	0	0	2,098.00	SF	4.00	4.00	100	2018	2018	3	98	8,224	
46	4950	BOLLARD	0	0	0	0	2.00	UT	100.00	100.00	100	2018	2018	3	100	200	
47	0811	CONCRETE B	0	0	0	0	957.00	SF	5.20	5.20	100	2018	2018	3	98	4,877	
48	0400	CONC CURB	0	0	0	0	18.00	LF	15.00	15.00	100	2018	2018	3	99	267	
49	0803	ASPHALT C	0	0	0	0	8,766.00	SF	2.00	2.00	100	2018	2018	3	84	14,727	
50	0812	CONCRETE C	0	0	0	0	3,358.00	SF	4.00	4.00	100	2018	2018	3	98	13,163	

TOTAL OB/XF 68,165

LAND DESCRIPTION

LN	USE CODE	CLS	LAND USE DESCRIPTION	CAP	RD	LOC ZONE	FRONT	DEPTH	TOT LND UTS	UNIT TYPE	DT	DPTH FACT	% COND	TOT ADJ	UNIT PRICE	ADJ UNIT PRICE	LAND VALUE	OTHER ADJUSTMENTS AND NOTES	YEAR	DENSITY	DECL	FRZ	YR	CONSRV

REVIEW DATE 07/31/2019 BY KK Total Acres: 11.16 Total Land Value: 2,790,000 Market: 0 Agricultural: 0 Common: 2,790,000 PRINTED 08/02/2023 BY SYS

LOT 34 & PT LOTS 35 & 36 IN
OR 2525/1141 BEING PARCEL 1A
OCEAN BREEZE FARMS PBK 2/19

PR AMELIA ISLAND PROPCO LLC
C/O PGIM REAL ESTATE, ATTN FRANCES L FELICE
MADISON, NJ 07940

2023

00-00-30-044B-0034-0000

BUILDING CHARACTERISTICS

ELEMENT	CD	CONSTRUCTION
Exterior Wall	10	ABOVE AVG 100
Roof Structur	04	WOOD TRUSS 100
Roof Cover	03	COMP SHNGL 100
Interior Wall	05	DRYWALL 100
Interior Floo	07	CORK/VTILE 60
Interior Floo	14	CARPET 40
Ceiling	01	FIN.SUSPD 100
Air Condition	04	ROOF TOP 100
Heating Type	04	AIR DUCTED 100
Fixtures		112 100
Frame	02	WOOD FRAME 100
Story Height		13 100
RMS		36 100
Stories	2.	2. 100
Units		14 100
Occupancy	00	NONE 100
Quality	04	Quality Level 04
DOR CODE	0600	RETIREMENT HOMES
MAP NUM		MKT AREA 01
NEIGHBORHOOD/LOC	1079.00	

AREA TYPE	TOTAL GROSS AREA	PCT OF BASE	TOT ADJ AREA	SUBAREA MARKET VALUE
BAS	9,464	100	9,464	1,474,320
CAN	36	30	11	1,714
FSP	132	50	66	10,282
FSP	132	50	66	10,282
FSP	140	50	70	10,905
FSP	140	50	70	10,905
FSP	148	50	74	11,527
FSP	148	50	74	11,527
FSP	148	50	74	11,527
FSP	148	50	74	11,527
TOTALS	20,824		19,869	3,095,232

MARKET ADJUSTMENTS

TYPE	MDL	EFF. AREA	TOT ADJ PTS	EFF. BASE RATE	REPL. COST NEW	AYB	EYB	ECON	FNCT		NORM	% COND
7403	04	19,869	117.0358	160.60	3,190,961	2018	2018	0	0	0	3.00	97.00

6 ASSIST LIV - 0% - 0 Heated Area: 18928 HX Base Yr

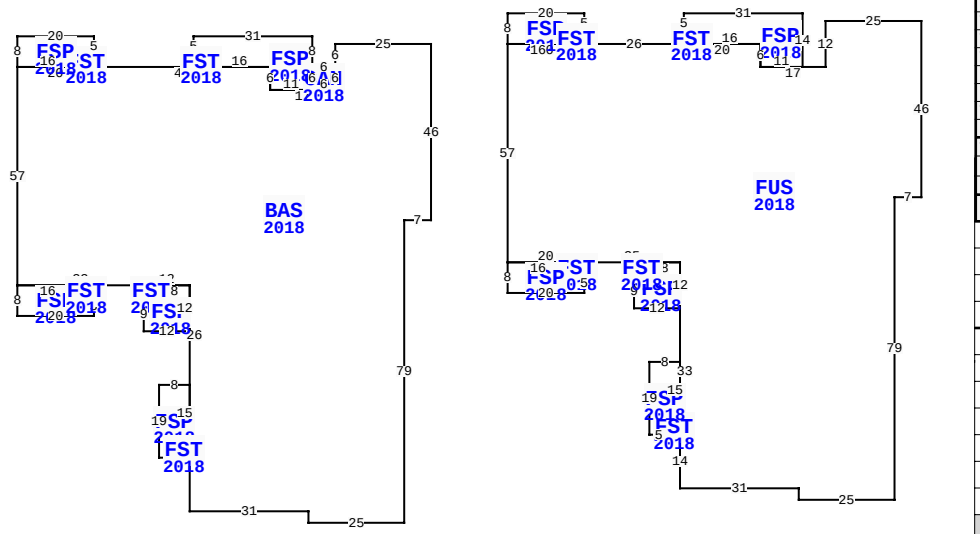

** This building has 23 Sub-Areas

AMELIA ISLAND PKWY, FERNANDINA BEACH

BLD DATE	07/31/2019	KK	LGL DATE	
XF DATE	07/31/2019	KK	LAND DATE	07/31/2019 KK
INC DATE			AG DATE	

NASSAU COUNTY PROPERTY

VALUATION SUMMARY

VALUATION BY	STANDARD
Tax Group: 2	Tax Dist:
BUILDING MARKET VALUE	34,182,972
TOTAL MARKET OB/XF VALUE	1,641,374
TOTAL LAND VALUE - MARKET	2,790,000
TOTAL MARKET VALUE	38,614,346
SOH/AGL Deduction	0
ASSESSED VALUE	38,614,346
TOTAL EXEMPTION VALUE	0
BASE TAXABLE VALUE	38,614,346
TOTAL JUST VALUE	38,614,346
NCON VALUE	0
INCOME VALUE	
PREVIOUS YEAR MKT VALUE	35,563,161

PERMIT NUM	DESCRIPTION	AMT	ISSUED

SALES DATA

OFF RECORD Number	DATE	TYPE INST	Q / U	V / I	RSN CD	SALE PRICE
2525/1141	12/23/2021	SW	Q	I	05	58,457,800
GRANTOR: THE ASPIRE AT AMELIA						
GRANTEE: PR AMELIA ISLAND PR						
2088/0068	12/07/2016	SW	Q	V	05	2,240,000
GRANTOR: AMELIA HOLDING LLC						
GRANTEE: THE ASPIRE AT AMELI						

BUILDING NOTES

BUILDING DIMENSIONS

BAS=[YR=2018] W25 S6 CAN=[YR=2018] W6 FSP=[YR=2018] N8 W31 S5 FST=[YR=2018] S3 E4 N3 W4$ E4 S3 E16 S6 E11 N6$ S6 E6 N6$ S6 W17 N6 W46 FST=[YR=2018] N3 FSP=[YR=2018] N5 W20 S8 E16 N3 E4$ W4 S3 E4$ W20 S57 FSP=[YR=2018] S8 E20 N5 FST=[YR=2018] N3 W4 S3 E4$ W4 N3 W16$ E33 FST=[YR=2018] S3 FSP=[YR=2018] S9 E12 N12 W8 S3 W4$ E4 N3 W4$ E12 S26 FSP=[YR=2018] W8 S19 E5 FST=[YR=2018] E3 N4 W3 S4$ N4 E3 N15$ S33 E31 S3 E25 N79 E7 N46 $ PTR= E40 FUS=[YR=2018] E26 FST=[YR=2018] N3 FSP=[YR=2018] N5 E31 S14 W11 N6 W16 N3 W4$ E4 S3 W4 $ E20 S6 E17 N12 E25 S46 W7 S79 W25 N3 W31 N14 FST=[YR=2018] W3 FSP=[YR=2018] W5 N19 E8 S15 W3 S4$ N4 E3 S4$ N33 FSP=[YR=2018] W12 N9 FST=[YR=2018] N3 E4 S3 W4$ E4

EXTRA FEATURES

LN	OB/XF CODE	DESCRIPTION	BLD	CAP	L	W	UNITS	UT	Adj R	ADJ UNIT PRICE	ORIG COND	YEAR ON	YEAR ACTUAL	Q	% COND	OB/XF MKT VALUE	NOTES
51	0856	POROUS CC	0	0	0	0	1,822.00	SF	2.50	2.50	100	2018	2018	3	98	4,464	
52	0810	CONCRETE A	0	0	0	0	61.00	SF	6.50	6.50	100	2018	2018	3	98	389	
53	0400	CONC CURB	0	0	0	0	515.00	LF	15.00	15.00	100	2018	2018	3	99	7,648	
54	0811	CONCRETE B	0	0	31	18	558.00	SF	5.20	5.20	100	2018	2018	3	98	2,844	
55	0402	CONC BUMPE	0	0	0	0	2.00	UT	25.00	25.00	100	2018	2018	3	99	50	
56	0400	CONC CURB	0	0	0	0	512.00	LF	15.00	15.00	100	2018	2018	3	99	7,603	
57	0972	ST LGHT UN	0	0	0	0	1.00	UT	2,530.00	2,530.00	100	2018	2018	3	95	2,404	
58	0812	CONCRETE C	0	0	0	0	3,494.00	SF	4.00	4.00	100	2018	2018	3	98	13,696	
59	0811	CONCRETE B	0	0	0	0	566.00	SF	5.20	5.20	100	2018	2018	3	98	2,884	
60	0462	ST/AL FNC	0	0	0	0	5,028.00	SF	10.00	10.00	100	2018	2018	3	90	45,252	

TOTAL OB/XF 87,234

LAND DESCRIPTION

LN	USE CODE	CLS	LAND USE DESCRIPTION	CAP	RD	LOC ZONE	FRONT	DEPTH	TOT LND UTS	UNIT TYPE	DT	DPTH FACT	% COND	TOT ADJ	UNIT PRICE	ADJ UNIT PRICE	LAND VALUE	OTHER ADJUSTMENTS AND NOTES	YEAR	DENSITY	DECL	FRZ	YR	CONSRV

REVIEW DATE 07/31/2019 BY KK Total Acres: 11.16 Total Land Value: 2,790,000 Market: 0 Agricultural: 0 Common: 2,790,000 PRINTED 08/02/2023 BY SYS

LOT 34 & PT LOTS 35 & 36 IN
OR 2525/1141 BEING PARCEL 1A
OCEAN BREEZE FARMS PBK 2/19

PR AMELIA ISLAND PROPCO LLC
C/O PGIM REAL ESTATE, ATTN FRANCES L FELICE
MADISON, NJ 07940

2023

00-00-30-044B-0034-0000

NASSAU COUNTY PROPERTY

BUILDING CHARACTERISTICS

ELEMENT	CD	CONSTRUCTION
Exterior Wall	10	ABOVE AVG 100
Roof Structur	04	WOOD TRUSS 100
Roof Cover	03	COMP SHNGL 100
Interior Wall	05	DRYWALL 100
Interior Floo	07	CORK/VTILE 60
Interior Floo	14	CARPET 40
Ceiling	01	FIN.SUSPD 100
Air Condition	04	ROOF TOP 100
Heating Type	04	AIR DUCTED 100
Fixtures		128 100
Frame	02	WOOD FRAME 100
Story Height		13 100
RMS		56 100
Stories	2.	2. 100
Units		16 100
Occupancy	00	NONE 100
Quality	04	Quality Level 04
DOR CODE	0600	RETIREMENT HOMES
MAP NUM		MKT AREA 01
NEIGHBORHOOD/LOC	1079.00	

AREA TYPE	TOTAL GROSS AREA	PCT OF BASE	TOT ADJ AREA	SUBAREA MARKET VALUE
BAS	10,842	100	10,842	1,688,988
CAN	1,008	30	302	47,046
FSP	140	50	70	10,905
FSP	140	50	70	10,905
FSP	140	50	70	10,905
FSP	147	50	74	11,527
FSP	147	50	74	11,527
FSP	148	50	74	11,527
FSP	302	50	151	23,523
FSP	312	50	156	24,302
TOTALS	26,540		24,090	3,752,788

MARKET ADJUSTMENTS

TYPE	MDL	EFF. AREA	TOT ADJ PTS	EFF. BASE RATE	REPL. COST NEW	AYB	EYB	ECON	FNCT		NORM	% COND
7403	04	24,090	117.0358	160.60	3,868,854	2018	2018	0	0	0	3.00	97.00

7 ASSIST LIV - 0% - 0 Heated Area: 22045 HX Base Yr

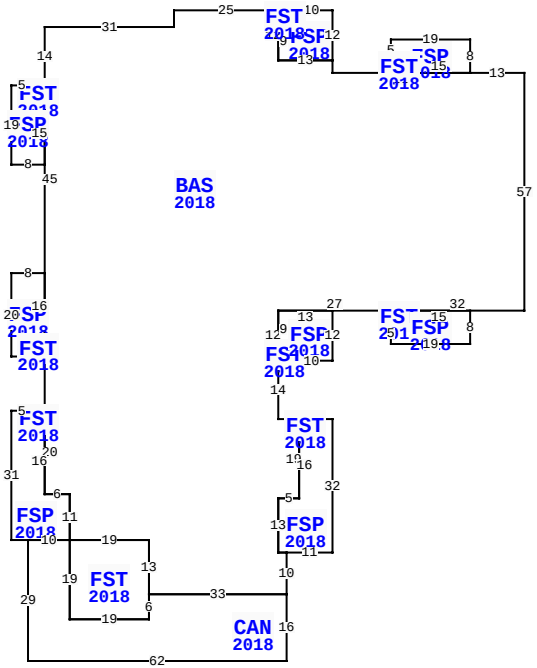

** This building has 22 Sub-Areas

AMELIA ISLAND PKWY, FERNANDINA BEACH

BLD DATE	07/31/2019	KK	LGL DATE	
XF DATE	07/31/2019	KK	LAND DATE	07/31/2019 KK
INC DATE			AG DATE	

NASSAU COUNTY PROPERTY VALUATION SUMMARY

VALUATION BY	STANDARD
Tax Group: 2	Tax Dist:
BUILDING MARKET VALUE	34,182,972
TOTAL MARKET OB/XF VALUE	1,641,374
TOTAL LAND VALUE - MARKET	2,790,000
TOTAL MARKET VALUE	38,614,346
SOH/AGL Deduction	0
ASSESSED VALUE	38,614,346
TOTAL EXEMPTION VALUE	0
BASE TAXABLE VALUE	38,614,346
TOTAL JUST VALUE	38,614,346
NCON VALUE	0
INCOME VALUE	
PREVIOUS YEAR MKT VALUE	35,563,161

PERMIT NUM	DESCRIPTION	AMT	ISSUED

SALES DATA

OFF RECORD Number	DATE	TYPE INST	Q U	V I	RSN CD	SALE PRICE
2525/1141	12/23/2021	SW	Q	I	05	58,457,800
GRANTOR: THE ASPIRE AT AMELIA						
GRANTEE: PR AMELIA ISLAND PR						
2088/0068	12/07/2016	SW	Q	V	05	2,240,000
GRANTOR: AMELIA HOLDING LLC						
GRANTEE: THE ASPIRE AT AMELI						

BUILDING NOTES

BUILDING DIMENSIONS

BAS=[YR=2018] W13FSP=[YR=2018] N8W19S5 FST=[YR=2018]
S3E4N3W4$E4S3E15$W33N3 FSP=[YR=2018] N12W10FST=[YR=2018]
W3S3E3N3 $S3W3S9E13$W13N12W25S4W31S14 FST=[YR=2018]
W3FSP=[YR=2018] W5S19E8N15W3 N4$S4E3N4$S45FSP=[YR=2018]
W8S20E5 FST=[YR=2018] E3N4W3S4$N4E3N16$S33 FST=[YR=2018]
W3FSP=[YR=2018] W5S31E4 CAN=[YR=2018]
S29E62N16W33FST=[YR=2018] N13W19S19E19N6$S6W19N19W10$E10
N11W6N16W3N4$S4E3N4$S20E6S11 E19S13E33N10FSP=[YR=2018]
E11N32W5 FST=[YR=2018] W3S3E3N3$S3W3S16W5S13
E2$W2N13E5N19W5N14FST=[YR=2018] E3 FSP=[YR=2018]
E10N12W13S9E3S3$N3W3S3 $N12E27FST=[YR=2018] S3FSP=[YR=2018]
S5E19 N8W15S3W4$E4N3W4$E32N57$ FUS=[YR=2018] 11203$

EXTRA FEATURES

LN	OB/XF CODE	DESCRIPTION	BLD	CAP	L	W	UNITS	UT	Adj R	ADJ UNIT PRICE	ORIG COND	YEAR ON	YEAR ACTUAL	Q	% COND	OB/XF MKT VALUE	NOTES
61	0812	CONCRETE C	0	0	0	0	4,180.00	SF	4.00	4.00	100	2018	2018	3	98	16,386	
62	0972	ST LGHT UN	0	0	0	0	2.00	UT	2,530.00	2,530.00	100	2018	2018	3	95	4,807	
63	0400	CONC CURB	0	0	0	0	90.00	LF	15.00	15.00	100	2018	2018	3	99	1,337	
64	0648	LIGHTS-AV	0	0	0	0	22.00	UT	140.00	140.00	100	2018	2018	3	86	2,649	
65	0648	LIGHTS-AV	0	0	0	0	9.00	UT	140.00	140.00	100	2018	2018	3	86	1,084	
66	0648	LIGHTS-AV	0	0	0	0	2.00	UT	84.00	84.00	100	2018	2018	3	86	144	
67	0811	CONCRETE B	0	0	47	15	705.00	SF	5.20	5.20	100	2018	2018	3	98	3,593	
68	0810	CONCRETE A	0	0	49	5	245.00	SF	6.50	6.50	100	2018	2018	3	98	1,561	
69	1242	WD DECK A	0	0	19	5	95.00	SF	10.00	10.00	100	2018	2018	3	86	817	
70	0350	CARPORT WD	0	0	19	15	285.00	SF	19.50	19.50	100	2018	2018	3	86	4,779	

TOTAL OB/XF 37,157

LAND DESCRIPTION

LN	USE CODE	CLS	LAND USE DESCRIPTION	CAP	RD	LOC ZONE	FRONT	DEPTH	TOT LND UTS	UNIT TYPE	DT	DPTH FACT	% COND	TOT ADJ	UNIT PRICE	ADJ UNIT PRICE	LAND VALUE	OTHER ADJUSTMENTS AND NOTES	YEAR	DENSITY	DECL	FRZ	YR	CONSRV

REVIEW DATE 07/31/2019 BY KK Total Acres: 11.16 Total Land Value: 2,790,000 Market: 0 Agricultural: 0 Common: 2,790,000 PRINTED 08/02/2023 BY SYS

LOT 34 & PT LOTS 35 & 36 IN
OR 2525/1141 BEING PARCEL 1A
OCEAN BREEZE FARMS PBK 2/19

PR AMELIA ISLAND PROPCO LLC
C/O PGIM REAL ESTATE, ATTN FRANCES L FELICE
MADISON, NJ 07940

2023

00-00-30-044B-0034-0000

BUILDING CHARACTERISTICS

ELEMENT	CD	CONSTRUCTION
Exterior Wall	10	ABOVE AVG 100
Roof Structur	04	WOOD TRUSS 100
Roof Cover	03	COMP SHNGL 100
Interior Wall	05	DRYWALL 100
Interior Floo	07	CORK/VTILE 60
Interior Floo	14	CARPET 40
Ceiling	01	FIN.SUSPD 100
Air Condition	04	ROOF TOP 100
Heating Type	04	AIR DUCTED 100
Fixtures		74 100
Frame	02	WOOD FRAME 100
Story Height		13 100
RMS		30 100
Stories	2.	2. 100
Units		8 100
Occupancy	00	NONE 100
Quality	04	Quality Level 04

DOR CODE	0600	RETIREMENT HOMES	
MAP NUM		MKT AREA	01
NEIGHBORHOOD/LOC	1079.00		

AREA TYPE	TOTAL GROSS AREA	PCT OF BASE	TOT ADJ AREA	SUBAREA MARKET VALUE
BAS	5,517	100	5,517	886,581
CAN	84	30	25	4,018
FSP	1,152	50	576	92,563
FST	96	50	48	7,713
FUS	5,643	100	5,643	906,830
TOTALS	12,492		11,809	1,897,705

MARKET ADJUSTMENTS

TYPE	MDL	EFF. AREA	TOT ADJ PTS	EFF. BASE RATE	REPL. COST NEW	AYB	EYB	ECON	FNCT		NORM	% COND
7403	04	11,809	120.7317	165.67	1,956,397	2018	2018	0	0	0	3.00	97.00

8 ASSIST LIV – 0% - 0 Heated Area: 11160 HX Base Yr

AMELIA ISLAND PKWY, FERNANDINA BEACH

BLD DATE	07/31/2019	KK	LGL DATE	
XF DATE	07/31/2019	KK	LAND DATE	07/31/2019 KK
INC DATE			AG DATE	

NASSAU COUNTY PROPERTY

PAGE 8 of 19 2

VALUATION SUMMARY

VALUATION BY	STANDARD
Tax Group: 2	Tax Dist:
BUILDING MARKET VALUE	34,182,972
TOTAL MARKET OB/XF VALUE	1,641,374
TOTAL LAND VALUE - MARKET	2,790,000
TOTAL MARKET VALUE	38,614,346
SOH/AGL Deduction	0
ASSESSED VALUE	38,614,346
TOTAL EXEMPTION VALUE	0
BASE TAXABLE VALUE	38,614,346
TOTAL JUST VALUE	38,614,346
NCON VALUE	0
INCOME VALUE	
PREVIOUS YEAR MKT VALUE	35,563,161

PERMIT NUM	DESCRIPTION	AMT	ISSUED

SALES DATA

OFF RECORD Number	DATE	TYPE INST	Q U	V I	RSN CD	SALE PRICE
2525/1141	12/23/2021	SW	Q	I	05	58,457,800
GRANTOR: THE ASPIRE AT AMELIA						
GRANTEE: PR AMELIA ISLAND PR						
2088/0068	12/07/2016	SW	Q	V	05	2,240,000
GRANTOR: AMELIA HOLDING LLC						
GRANTEE: THE ASPIRE AT AMELI						

BUILDING NOTES

BUILDING DIMENSIONS

BAS=[YR=2018] 5517$ FUS=[YR=2018] 5643$ FSP=[YR=2018] 1152$
FST=[YR=2018] 96$ CAN=[YR=2018] 84$.

EXTRA FEATURES

LN	OB/XF CODE	DESCRIPTION	BLD	CAP	L	W	UNITS	UT	Adj R	ADJ UNIT PRICE	ORIG COND	YEAR ON	YEAR ACTUAL	Q	% COND	OB/XF MKT VALUE	NOTES
71	0300	BOAT DCK W	0	0	0	0	318.00	SF	40.00	40.00	100	2018	2018	3	90	11,448	
72	0446	BOX FNC 6'	0	0	0	0	104.00	LF	20.00	20.00	100	2018	2018	3	86	1,789	
73	0812	CONCRETE C	0	0	0	0	1,048.00	SF	4.00	4.00	100	2018	2018	3	98	4,108	
74	0446	BOX FNC 6'	0	0	0	0	180.00	LF	20.00	20.00	100	2018	2018	3	86	3,096	
75	0463	FENCE GATE	0	0	0	0	2.00	UT	300.00	300.00	100	2018	2018	3	95	570	
76	0090	AUTO DOOR	0	0	0	0	4.00	UT	2,500.00	2,500.00	100	2018	2018	3	86	8,600	
77	0978	SECURTY LT	0	0	0	0	6.00	UT	450.00	450.00	100	2018	2018	3	95	2,565	
78	0381	COOLER	0	0	13	10	130.00	SF	82.50	82.50	100	2018	2018	3	95	10,189	
79	0383	FREEZER	0	0	13	8	104.00	SF	105.00	105.00	100	2018	2018	3	95	10,374	
80	0410	ELEVATOR	0	0	0	0	3.00	UT	60,000.00	60,000.00	100	2018	2018	3	100	180,000	

TOTAL OB/XF 232,739

LAND DESCRIPTION

LN	USE CODE	CLS	LAND USE DESCRIPTION	CAP	RD	LOC ZONE	FRONT	DEPTH	TOT LND UTS	UNIT TYPE	DT	DPTH FACT	% COND	TOT ADJ	UNIT PRICE	ADJ UNIT PRICE	LAND VALUE	OTHER ADJUSTMENTS AND NOTES	YEAR	DENSITY	DECL	FRZ	YR	CONSRV

REVIEW DATE 07/31/2019 BY KK Total Acres: 11.16 Total Land Value: 2,790,000 Market: 0 Agricultural: 0 Common: 2,790,000 PRINTED 08/02/2023 BY SYS

LOT 34 & PT LOTS 35 & 36 IN
OR 2525/1141 BEING PARCEL 1A
OCEAN BREEZE FARMS PBK 2/19

PR AMELIA ISLAND PROPCO LLC
C/O PGIM REAL ESTATE, ATTN FRANCES L FELICE
MADISON, NJ 07940

2023

00-00-30-044B-0034-0000

BUILDING CHARACTERISTICS

ELEMENT	CD	CONSTRUCTION
Exterior Wall	10	ABOVE AVG 100
Roof Structur	04	WOOD TRUSS 100
Roof Cover	03	COMP SHNGL 90
Roof Cover	04	BUILT-UP 10
Interior Wall	05	DRYWALL 100
Interior Floo	07	CORK/VTILE 60
Interior Floo	14	CARPET 40
Ceiling	01	FIN.SUSPD 100
Air Condition	04	ROOF TOP 100
Heating Type	04	AIR DUCTED 100
Fixtures		135 100
Frame	02	WOOD FRAME 100
Story Height		13 100
RMS		57 100
Stories	2.	2. 100
Units		15 100
Occupancy	00	NONE 100
Quality	04	Quality Level 04
DOR CODE	0600	RETIREMENT HOMES
MAP NUM		MKT AREA 01
NEIGHBORHOOD/LOC	1079.00	

AREA TYPE	TOTAL GROSS AREA	PCT OF BASE	TOT ADJ AREA	SUBAREA MARKET VALUE
BAS	10,940	100	10,940	1,704,255
CAN	81	30	24	3,738
FSP	1,346	50	673	104,841
FST	108	50	54	8,412
FUS	10,817	100	10,817	1,685,094
TOTALS	23,292		22,508	3,506,341

MARKET ADJUSTMENTS

TYPE	MDL	EFF. AREA	TOT ADJ PTS	EFF. BASE RATE	REPL. COST NEW	AYB	EYB	ECON	FNCT		NORM	% COND
7403	04	22,508	117.0358	160.60	3,614,785	2018	2018	0	0	0	3.00	97.00

9 ASSIST LIV – 0% - 0 Heated Area: 21757 HX Base Yr

AMELIA ISLAND PKWY, FERNANDINA BEACH

BLD DATE	07/31/2019	KK	LGL DATE	
XF DATE	07/31/2019	KK	LAND DATE	07/31/2019 KK
INC DATE			AG DATE	

NASSAU COUNTY PROPERTY

VALUATION SUMMARY

VALUATION BY	STANDARD
Tax Group: 2	Tax Dist:
BUILDING MARKET VALUE	34,182,972
TOTAL MARKET OB/XF VALUE	1,641,374
TOTAL LAND VALUE - MARKET	2,790,000
TOTAL MARKET VALUE	38,614,346
SOH/AGL Deduction	0
ASSESSED VALUE	38,614,346
TOTAL EXEMPTION VALUE	0
BASE TAXABLE VALUE	38,614,346
TOTAL JUST VALUE	38,614,346
NCON VALUE	0
INCOME VALUE	
PREVIOUS YEAR MKT VALUE	35,563,161

PERMIT NUM	DESCRIPTION	AMT	ISSUED

SALES DATA

OFF RECORD Number	DATE	TYPE INST	Q / U	V / I	RSN CD	SALE PRICE
2525/1141	12/23/2021	SW	Q	I	05	58,457,800
GRANTOR: THE ASPIRE AT AMELIA						
GRANTEE: PR AMELIA ISLAND PR						
2088/0068	12/07/2016	SW	Q	V	05	2,240,000
GRANTOR: AMELIA HOLDING LLC						
GRANTEE: THE ASPIRE AT AMELI						

BUILDING NOTES

BUILDING DIMENSIONS

BAS=[YR=2018] 10940$ FUS=[YR=2018] 10817 $ FSP=[YR=2018] 1346$ FST=[YR=2018] 108$ CAN2018 = 81$.

EXTRA FEATURES

LN	OB/XF CODE	DESCRIPTION	BLD	CAP	L	W	UNITS	UT	Adj R	ADJ UNIT PRICE	ORIG COND	YEAR ON	YEAR ACTUAL	Q	% COND	OB/XF MKT VALUE	NOTES
81	0504	FP-ELECTRI	0	0	0	0	1.00	UT	6,000.00	6,000.00	100	2018	2018	3	99	5,940	
82	0504	FP-ELECTRI	0	0	0	0	1.00	UT	8,000.00	8,000.00	100	2018	2018	3	99	7,920	
83	0966	FIRE SPRNK	0	0	0	0	178,997.00	SF	3.00	3.00	100	2018	2018	3	98	526,251	
84	0861	POOL GUNIT	0	0	0	0	944.00	SF	255.00	255.00	100	2019	2019	3	93	223,870	
85	0462	ST/AL FNC	0	0	0	0	980.00	SF	10.00	10.00	100	2019	2019	3	93	9,114	
86	0845	KOOL DECK	0	0	0	0	2,500.00	SF	7.25	7.25	100	2019	2019	3	93	17,944	
87	1076	TRELLIS A	0	0	8	8	64.00	SF	7.50	7.50	100	2019	2019	3	93	446	
88	1076	TRELLIS A	0	0	8	8	64.00	SF	7.50	7.50	100	2019	2019	3	93	446	
89	1076	TRELLIS A	0	0	8	8	1,076.00	SF	7.50	7.50	100	2019	2019	3	93	7,505	
90	1076	TRELLIS A	0	0	8	8	64.00	SF	7.50	7.50	100	2019	2019	3	93	446	

TOTAL OB/XF 799,882

LAND DESCRIPTION

LN	USE CODE	CLS	LAND USE DESCRIPTION	CAP	RD	LOC ZONE	FRONT	DEPTH	TOT LND UTS	UNIT TYPE	DT	DPTH FACT	% COND	TOT ADJ	UNIT PRICE	ADJ UNIT PRICE	LAND VALUE	OTHER ADJUSTMENTS AND NOTES	YEAR	DENSITY	DECL	FRZ	YR	CONSRV

REVIEW DATE 07/31/2019 BY KK Total Acres: 11.16 Total Land Value: 2,790,000 Market: 0 Agricultural: 0 Common: 2,790,000 PRINTED 08/02/2023 BY SYS

LOT 34 & PT LOTS 35 & 36 IN
OR 2525/1141 BEING PARCEL 1A
OCEAN BREEZE FARMS PBK 2/19

PR AMELIA ISLAND PROPCO LLC
C/O PGIM REAL ESTATE, ATTN FRANCES L FELICE
MADISON, NJ 07940

2023

00-00-30-044B-0034-0000

NASSAU COUNTY PROPERTY

BUILDING CHARACTERISTICS

ELEMENT	CD	CONSTRUCTION
Exterior Wall	10	ABOVE AVG 50
Exterior Wall	16	WD FR STUC 50
Roof Structur	03	GABLE/HIP 100
Roof Cover	03	COMP SHNGL 100
Interior Wall	05	DRYWALL 100
Interior Floo	11	CLAY TILE 70
Interior Floo	14	CARPET 30
Air Condition	03	CENTRAL 100
Heating Type	04	AIR DUCTED 100
Bedrooms		4 100
Bathrooms		4 100
Frame	02	WOOD FRAME 100
Stories	1.	1. 100
Units		0 100
Occupancy	00	NONE 100
Quality	05	Quality Level 05
DOR CODE	0600	RETIREMENT HOMES
MAP NUM		MKT AREA 01
NEIGHBORHOOD/LOC	1079.00	

AREA TYPE	TOTAL GROSS AREA	PCT OF BASE	TOT ADJ AREA	SUBAREA MARKET VALUE
BAS	3,026	100	3,026	462,181
FGR	300	55	165	25,202
FGR	300	55	165	25,202
FOP	2	30	1	153
FOP	2	30	1	153
FOP	208	30	62	9,470
FOP	208	30	62	9,470
FSP	86	40	34	5,193
FSP	86	40	34	5,193
FST	20	55	11	1,680
TOTALS	4,258		3,572	545,575

MARKET ADJUSTMENTS

TYPE	MDL	EFF. AREA	TOT ADJ PTS	EFF. BASE RATE	REPL. COST NEW	AYB	EYB	ECON	FNCT		NORM	% COND
2700	01	3,572	117.9090	154.67	552,481	2019	2019	0	0	0	1.25	98.75

10 DUPLEX – 0% - 0 Heated Area: 3026 HX Base Yr

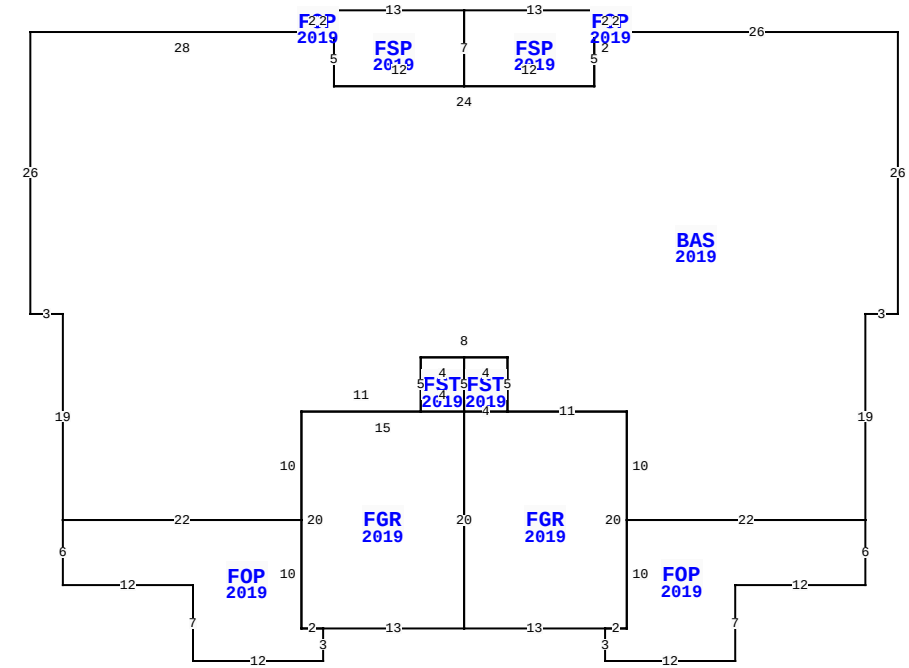

** This building has 11 Sub-Areas

AMELIA ISLAND PKWY, FERNANDINA BEACH

BLD DATE	07/31/2019	KK	LGL DATE	
XF DATE	07/31/2019	KK	LAND DATE	07/31/2019 KK
INC DATE			AG DATE	

VALUATION SUMMARY

VALUATION BY	STANDARD
Tax Group: 2	Tax Dist:
BUILDING MARKET VALUE	34,182,972
TOTAL MARKET OB/XF VALUE	1,641,374
TOTAL LAND VALUE - MARKET	2,790,000
TOTAL MARKET VALUE	38,614,346
SOH/AGL Deduction	0
ASSESSED VALUE	38,614,346
TOTAL EXEMPTION VALUE	0
BASE TAXABLE VALUE	38,614,346
TOTAL JUST VALUE	38,614,346
NCON VALUE	0
INCOME VALUE	
PREVIOUS YEAR MKT VALUE	35,563,161

PERMIT NUM	DESCRIPTION	AMT	ISSUED

SALES DATA

OFF RECORD Number	DATE	TYPE INST	Q U	V I	RSN CD	SALE PRICE
2525/1141	12/23/2021	SW	Q	I	05	58,457,800
GRANTOR: THE ASPIRE AT AMELIA						
GRANTEE: PR AMELIA ISLAND PR						
2088/0068	12/07/2016	SW	Q	V	05	2,240,000
GRANTOR: AMELIA HOLDING LLC						
GRANTEE: THE ASPIRE AT AMELI						

BUILDING NOTES

BUILDING DIMENSIONS

BAS=[YR=2019] W26 FOP=[YR=2019] N2 W1 FSP=[YR=2019] W13 FSP=[YR=2019] W13 FOP=[YR=2019] W1 S2 E1 N2$ S2 E1 S5 E12 N7$ S7 E12 N5 E1 N2$ S2 E1 $ W2 S5 W24 N5 W28 S26 E3 S19 FOP=[YR=2019] S6 E12 S7 E12 N3 FGR=[YR=2019] E13 FGR=[YR=2019] E13 FOP=[YR=2019] S3 E12 N7 E12 N6 W22 S10 W2$ E2 N20 W11 FST=[YR=2019] N5 W4 FST=[YR=2019] W4 S5 E4 N5$ S5 E4 $ W4 S20$ N20 W15 S20 E2$ W2 N10 W22$ E22 N10 E11 N5 E8 S5 E11 S10 E22 N19 E3 N26$.

EXTRA FEATURES

LN	OB/XF CODE	DESCRIPTION	BLD	CAP	L	W	UNITS	UT	Adj R	ADJ UNIT PRICE	ORIG COND	YEAR ON	YEAR ACTUAL	Q	% COND	OB/XF MKT VALUE	NOTES
91	1126	CB/STC 8"	0	0	0	0	40.00	SF	8.00	8.00	100	2019	2019	3	99	317	
92	0648	LIGHTS-AV	0	0	0	0	9.00	UT	140.00	140.00	100	2019	2019	3	90	1,134	
93	0648	LIGHTS-AV	0	0	0	0	13.00	UT	84.00	84.00	100	2019	2019	3	90	983	
94	0855	CONC PAVER	0	0	0	0	1,011.00	SF	10.00	10.00	100	2019	2019	3	99	10,009	
95	0855	CONC PAVER	0	0	0	0	1,005.00	SF	10.00	10.00	100	2019	2019	3	99	9,950	
96	0855	CONC PAVER	0	0	0	0	1,045.00	SF	10.00	10.00	100	2019	2019	3	99	10,346	
97	0855	CONC PAVER	0	0	0	0	1,138.00	SF	10.00	10.00	100	2019	2019	3	99	11,266	
98	0855	CONC PAVER	0	0	0	0	2,408.00	SF	10.00	10.00	100	2019	2019	3	99	23,839	
99	0855	CONC PAVER	0	0	0	0	1,077.00	SF	10.00	10.00	100	2019	2019	3	99	10,662	
100	0855	CONC PAVER	0	0	0	0	506.00	SF	10.00	10.00	100	2019	2019	3	99	5,009	

TOTAL OB/XF 83,515

LAND DESCRIPTION

LN	USE CODE	CLS	LAND USE DESCRIPTION	CAP	RD	LOC ZONE	FRONT	DEPTH	TOT LND UTS	UNIT TYPE	DT	DPTH FACT	% COND	TOT ADJ	UNIT PRICE	ADJ UNIT PRICE	LAND VALUE	OTHER ADJUSTMENTS AND NOTES	YEAR	DENSITY	DECL	FRZ	YR	CONSRV

REVIEW DATE 07/31/2019 BY KK Total Acres: 11.16 Total Land Value: 2,790,000 Market: 0 Agricultural: 0 Common: 2,790,000 PRINTED 08/02/2023 BY SYS

LOT 34 & PT LOTS 35 & 36 IN
OR 2525/1141 BEING PARCEL 1A
OCEAN BREEZE FARMS PBK 2/19

PR AMELIA ISLAND PROPCO LLC
C/O PGIM REAL ESTATE, ATTN FRANCES L FELICE
MADISON, NJ 07940

2023

00-00-30-044B-0034-0000

BUILDING CHARACTERISTICS

ELEMENT	CD	CONSTRUCTION
Exterior Wall	16	WD FR STUC 70
Exterior Wall	10	ABOVE AVG 30
Roof Structur	03	GABLE/HIP 100
Roof Cover	03	COMP SHNGL 100
Interior Wall	05	DRYWALL 100
Interior Floo	11	CLAY TILE 70
Interior Floo	14	CARPET 30
Air Condition	03	CENTRAL 100
Heating Type	04	AIR DUCTED 100
Bedrooms		4 100
Bathrooms		4 100
Frame	02	WOOD FRAME 100
Stories	1.	1. 100
Units		0 100
Occupancy	00	NONE 100
Quality	05	Quality Level 05
DOR CODE	0600	RETIREMENT HOMES
MAP NUM		MKT AREA 01
NEIGHBORHOOD/LOC	1079.00	

AREA TYPE	TOTAL GROSS AREA	PCT OF BASE	TOT ADJ AREA	SUBAREA MARKET VALUE
BAS	3,026	100	3,026	461,713
FGR	300	55	165	25,176
FGR	300	55	165	25,176
FOP	2	30	1	153
FOP	2	30	1	153
FOP	208	30	62	9,461
FOP	208	30	62	9,461
FSP	86	40	34	5,188
FSP	86	40	34	5,188
FST	20	55	11	1,678
TOTALS	4,258		3,572	545,023

MARKET ADJUSTMENTS

TYPE	MDL	EFF. AREA	TOT ADJ PTS	EFF. BASE RATE	REPL. COST NEW	AYB	EYB	ECON	FNCT		NORM	% COND
2700	01	3,572	117.9090	154.67	552,481	2019	2019	0	0	0	1.35	98.65

11 DUPLEX – 0% - 0 Heated Area: 3026 HX Base Yr

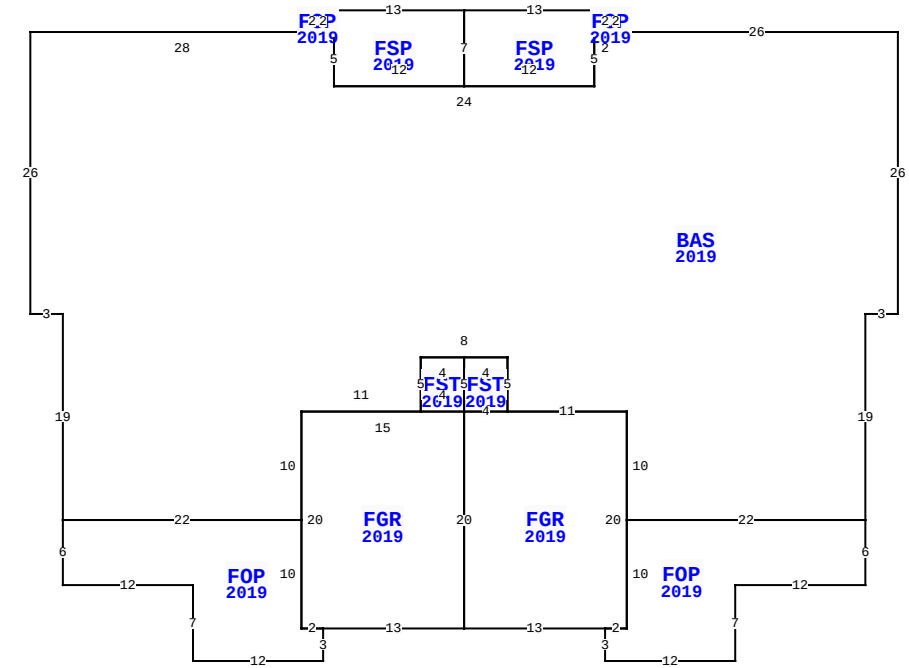

** This building has 11 Sub-Areas

AMELIA ISLAND PKWY, FERNANDINA BEACH

BLD DATE	07/31/2019	KK	LGL DATE	
XF DATE	07/31/2019	KK	LAND DATE	07/31/2019 KK
INC DATE			AG DATE	

NASSAU COUNTY PROPERTY

PAGE 11 of 19 2

VALUATION SUMMARY

VALUATION BY	STANDARD
Tax Group: 2	Tax Dist:
BUILDING MARKET VALUE	34,182,972
TOTAL MARKET OB/XF VALUE	1,641,374
TOTAL LAND VALUE - MARKET	2,790,000
TOTAL MARKET VALUE	38,614,346
SOH/AGL Deduction	0
ASSESSED VALUE	38,614,346
TOTAL EXEMPTION VALUE	0
BASE TAXABLE VALUE	38,614,346
TOTAL JUST VALUE	38,614,346
NCON VALUE	0
INCOME VALUE	
PREVIOUS YEAR MKT VALUE	35,563,161

PERMIT NUM	DESCRIPTION	AMT	ISSUED

SALES DATA

OFF RECORD Number	DATE	TYPE INST	Q U	V I	RSN CD	SALE PRICE
2525/1141	12/23/2021	SW	Q	I	05	58,457,800
GRANTOR: THE ASPIRE AT AMELIA						
GRANTEE: PR AMELIA ISLAND PR						
2088/0068	12/07/2016	SW	Q	V	05	2,240,000
GRANTOR: AMELIA HOLDING LLC						
GRANTEE: THE ASPIRE AT AMELI						

BUILDING NOTES

BUILDING DIMENSIONS

BAS=[YR=2019] W 26 FOP=[YR=2019] N2 W1 FSP=[YR=2019] W13 FSP=[YR=2019] W13 FOP=[YR=2019] W1 S2 E1 N2$ S2 E1 S5 E12 N7$ S7 E12 N5 E1 N2$ S2 E1 $ W2 S5 W24 N5 W28 S26 E3 S19 FOP=[YR=2019] S6 E12 S7 E12 N3 FGR=[YR=2019] E13 FGR=[YR=2019] E13 FOP=[YR=2019] S3 E12 N7 E12 N6 W22 S10 W2$ E2 N20 W11 FST=[YR=2019] N5 W4 FST=[YR=2019] W4 S5 E4 N5$ S5 E4 $ W4 S20$ N20 W15 S20 E2$ W2 N10 W22$ E22 N10 E11 N5 E8 S5 E11 S10 E22 N19 E3 N26$.

EXTRA FEATURES

LN	OB/XF CODE	DESCRIPTION	BLD	CAP	L	W	UNITS	UT	Adj R	ADJ UNIT PRICE	ORIG COND	YEAR ON	YEAR ACTUAL	Q	% COND	OB/XF MKT VALUE	NOTES
101	0855	CONC PAVER	0	0	0	0	506.00	SF	10.00	10.00	100	2019	2019	3	99	5,009	
102	0855	CONC PAVER	0	0	0	0	496.00	SF	10.00	10.00	100	2019	2019	3	99	4,910	
103	0855	CONC PAVER	0	0	0	0	492.00	SF	10.00	10.00	100	2019	2019	3	99	4,871	

LAND DESCRIPTION

TOTAL OB/XF 14,790

LN	USE CODE	CLS	LAND USE DESCRIPTION	CAP	RD	LOC ZONE	FRONT	DEPTH	TOT LND UTS	UNIT TYPE	DT	DPTH FACT	% COND	TOT ADJ	UNIT PRICE	ADJ UNIT PRICE	LAND VALUE	OTHER ADJUSTMENTS AND NOTES	YEAR	DENSITY	DECL	FRZ	YR	CONSRV

REVIEW DATE 07/31/2019 BY KK Total Acres: 11.16 Total Land Value: 2,790,000 Market: 0 Agricultural: 0 Common: 2,790,000 PRINTED 08/02/2023 BY SYS

LOT 34 & PT LOTS 35 & 36 IN
OR 2525/1141 BEING PARCEL 1A
OCEAN BREEZE FARMS PBK 2/19

PR AMELIA ISLAND PROPCO LLC
C/O PGIM REAL ESTATE, ATTN FRANCES L FELICE
MADISON, NJ 07940

2023

00-00-30-044B-0034-0000

BUILDING CHARACTERISTICS

ELEMENT	CD	CONSTRUCTION
Exterior Wall	16	WD FR STUC 70
Exterior Wall	10	ABOVE AVG 30
Roof Structur	03	GABLE/HIP 100
Roof Cover	03	COMP SHNGL 100
Interior Wall	05	DRYWALL 100
Interior Floo	11	CLAY TILE 70
Interior Floo	14	CARPET 30
Air Condition	03	CENTRAL 100
Heating Type	04	AIR DUCTED 100
Bedrooms		4 100
Bathrooms		4 100
Frame	02	WOOD FRAME 100
Stories	1.	1. 100
Units		0 100
Occupancy	00	NONE 100
Quality	05	Quality Level 05
DOR CODE	0600	RETIREMENT HOMES
MAP NUM		MKT AREA 01
NEIGHBORHOOD/LOC	1079.00	

AREA TYPE	TOTAL GROSS AREA	PCT OF BASE	TOT ADJ AREA	SUBAREA MARKET VALUE
BAS	3,026	100	3,026	461,713
FGR	300	55	165	25,176
FGR	300	55	165	25,176
FOP	2	30	1	153
FOP	2	30	1	153
FOP	208	30	62	9,461
FOP	208	30	62	9,461
FSP	86	40	34	5,188
FSP	86	40	34	5,188
FST	20	55	11	1,678
TOTALS	4,258		3,572	545,023

MARKET ADJUSTMENTS

TYPE	MDL	EFF. AREA	TOT ADJ PTS	EFF. BASE RATE	REPL. COST NEW	AYB	EYB	ECON	FNCT		NORM	% COND
2700	01	3,572	117.9090	154.67	552,481	2019	2019	0	0	0	1.35	98.65

12 DUPLEX – 0% - 0 Heated Area: 3026 HX Base Yr

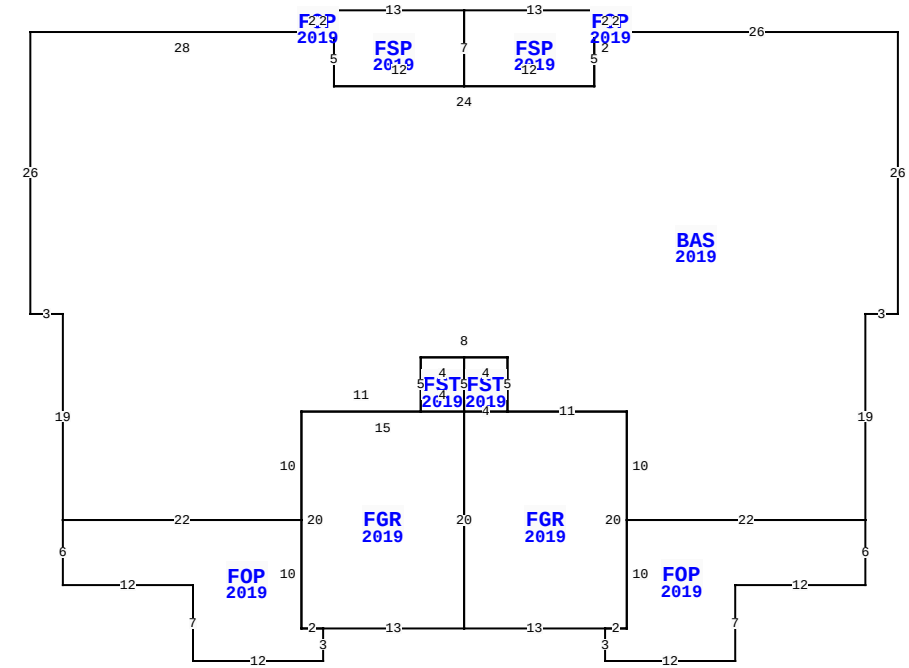

** This building has 11 Sub-Areas

AMELIA ISLAND PKWY, FERNANDINA BEACH

BLD DATE	07/31/2019	KK	LGL DATE	
XF DATE	07/31/2019	KK	LAND DATE	07/31/2019 KK
INC DATE			AG DATE	

NASSAU COUNTY PROPERTY

PAGE 12 of 19 2

VALUATION SUMMARY

VALUATION BY	STANDARD
Tax Group: 2	Tax Dist:
BUILDING MARKET VALUE	34,182,972
TOTAL MARKET OB/XF VALUE	1,641,374
TOTAL LAND VALUE - MARKET	2,790,000
TOTAL MARKET VALUE	38,614,346
SOH/AGL Deduction	0
ASSESSED VALUE	38,614,346
TOTAL EXEMPTION VALUE	0
BASE TAXABLE VALUE	38,614,346
TOTAL JUST VALUE	38,614,346
NCON VALUE	0
INCOME VALUE	
PREVIOUS YEAR MKT VALUE	35,563,161

PERMIT NUM	DESCRIPTION	AMT	ISSUED

SALES DATA

OFF RECORD Number	DATE	TYPE INST	Q U	V I	RSN CD	SALE PRICE
2525/1141	12/23/2021	SW	Q	I	05	58,457,800
GRANTOR: THE ASPIRE AT AMELIA						
GRANTEE: PR AMELIA ISLAND PR						
2088/0068	12/07/2016	SW	Q	V	05	2,240,000
GRANTOR: AMELIA HOLDING LLC						
GRANTEE: THE ASPIRE AT AMELI						

BUILDING NOTES

BUILDING DIMENSIONS

BAS=[YR=2019] W26 FOP=[YR=2019] N2 W1 FSP=[YR=2019] W13 FSP=[YR=2019] W13 FOP=[YR=2019] W1 S2 E1 N2$ S2 E1 S5 E12 N7$ S7 E12 N5 E1 N2$ S2 E1 $ W2 S5 W24 N5 W28 S26 E3 S19 FOP=[YR=2019] S6 E12 S7 E12 N3 FGR=[YR=2019] E13 FGR=[YR=2019] E13 FOP=[YR=2019] S3 E12 N7 E12 N6 W22 S10 W2$ E2 N20 W11 FST=[YR=2019] N5 W4 FST=[YR=2019] W4 S5 E4 N5$ S5 E4 $ W4 S20$ N20 W15 S20 E2$ W2 N10 W22$ E22 N10 E11 N5 E8 S5 E11 S10 E22 N19 E3 N26$.

EXTRA FEATURES

L N	OB/XF CODE	DESCRIPTION	BLD	CAP	L	W	UNITS	UT	Adj R	ADJ UNIT PRICE	ORIG COND	YEAR ON	YEAR ACTUAL	Q	% COND	OB/XF MKT VALUE	NOTES

LAND DESCRIPTION

TOTAL OB/XF 0

L N	USE CODE	CLS	LAND USE DESCRIPTION	CAP	R D	LOC ZONE	FRONT	DEPTH	TOT LND UTS	UNIT TYPE	D T	DPTH FACT	% COND	TOT ADJ	UNIT PRICE	ADJ UNIT PRICE	LAND VALUE	OTHER ADJUSTMENTS AND NOTES	YEAR	DENSITY	DECL	FRZ	YR	CONSRV

REVIEW DATE 07/31/2019 BY KK Total Acres: 11.16 Total Land Value: 2,790,000 Market: 0 Agricultural: 0 Common: 2,790,000 PRINTED 08/02/2023 BY SYS

LOT 34 & PT LOTS 35 & 36 IN
OR 2525/1141 BEING PARCEL 1A
OCEAN BREEZE FARMS PBK 2/19

PR AMELIA ISLAND PROPCO LLC
C/O PGIM REAL ESTATE, ATTN FRANCES L FELICE
MADISON, NJ 07940

2023

00-00-30-044B-0034-0000

BUILDING CHARACTERISTICS

ELEMENT	CD	CONSTRUCTION
Exterior Wall	16	WD FR STUC 70
Exterior Wall	10	ABOVE AVG 30
Roof Structur	03	GABLE/HIP 100
Roof Cover	03	COMP SHNGL 100
Interior Wall	05	DRYWALL 100
Interior Floo	11	CLAY TILE 70
Interior Floo	14	CARPET 30
Air Condition	03	CENTRAL 100
Heating Type	04	AIR DUCTED 100
Bedrooms		4 100
Bathrooms		4 100
Frame	02	WOOD FRAME 100
Stories	1.	1. 100
Units		0 100
Occupancy	00	NONE 100
Quality	05	Quality Level 05
DOR CODE	0600	RETIREMENT HOMES
MAP NUM		MKT AREA 01
NEIGHBORHOOD/LOC	1079.00	

AREA TYPE	TOTAL GROSS AREA	PCT OF BASE	TOT ADJ AREA	SUBAREA MARKET VALUE
BAS	3,026	100	3,026	461,713
FGR	300	55	165	25,176
FGR	300	55	165	25,176
FOP	2	30	1	153
FOP	2	30	1	153
FOP	208	30	62	9,461
FOP	208	30	62	9,461
FSP	86	40	34	5,188
FSP	86	40	34	5,188
FST	20	55	11	1,678
TOTALS	4,258		3,572	545,023

MARKET ADJUSTMENTS

TYPE	MDL	EFF. AREA	TOT ADJ PTS	EFF. BASE RATE	REPL. COST NEW	AYB	EYB	ECON	FNCT		NORM	% COND
2700	01	3,572	117.9090	154.67	552,481	2019	2019	0	0	0	1.35	98.65

13 DUPLEX – 0% - 0 Heated Area: 3026 HX Base Yr

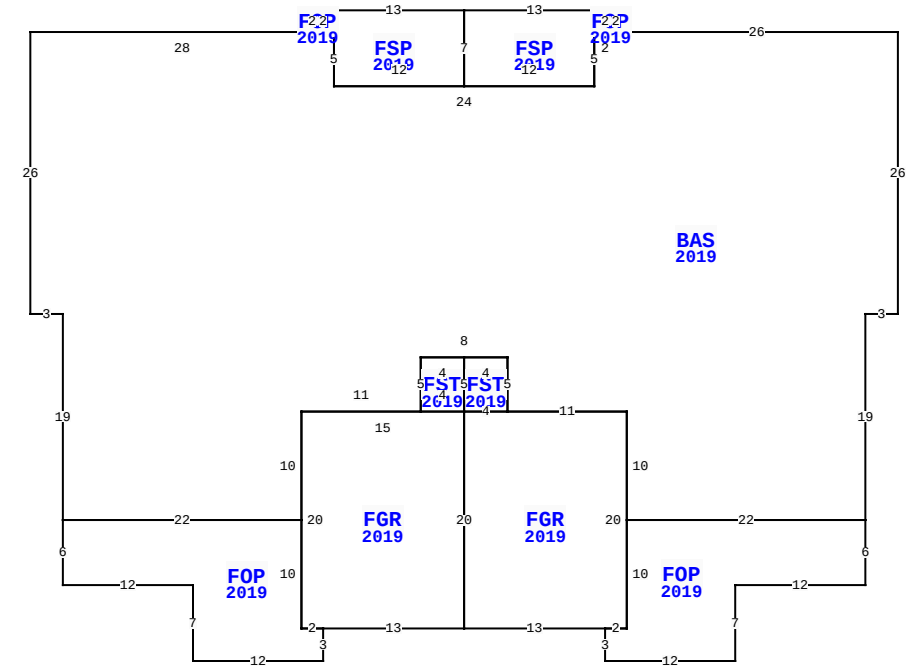

** This building has 11 Sub-Areas

AMELIA ISLAND PKWY, FERNANDINA BEACH

BLD DATE	07/31/2019	KK	LGL DATE	
XF DATE	07/31/2019	KK	LAND DATE	07/31/2019 KK
INC DATE			AG DATE	

NASSAU COUNTY PROPERTY

PAGE 13 of 19 2

VALUATION SUMMARY

VALUATION BY	STANDARD
Tax Group: 2	Tax Dist:
BUILDING MARKET VALUE	34,182,972
TOTAL MARKET OB/XF VALUE	1,641,374
TOTAL LAND VALUE - MARKET	2,790,000
TOTAL MARKET VALUE	38,614,346
SOH/AGL Deduction	0
ASSESSED VALUE	38,614,346
TOTAL EXEMPTION VALUE	0
BASE TAXABLE VALUE	38,614,346
TOTAL JUST VALUE	38,614,346
NCON VALUE	0
INCOME VALUE	
PREVIOUS YEAR MKT VALUE	35,563,161

PERMIT NUM	DESCRIPTION	AMT	ISSUED

SALES DATA

OFF RECORD Number	DATE	TYPE INST	Q U	V I	RSN CD	SALE PRICE
2525/1141	12/23/2021	SW	Q	I	05	58,457,800
GRANTOR: THE ASPIRE AT AMELIA						
GRANTEE: PR AMELIA ISLAND PR						
2088/0068	12/07/2016	SW	Q	V	05	2,240,000
GRANTOR: AMELIA HOLDING LLC						
GRANTEE: THE ASPIRE AT AMELI						

BUILDING NOTES

BUILDING DIMENSIONS

BAS=[YR=2019] W26 FOP=[YR=2019] N2 W1 FSP=[YR=2019] W13 FSP=[YR=2019] W13 FOP=[YR=2019] W1 S2 E1 N2$ S2 E1 S5 E12 N7$ S7 E12 N5 E1 N2$ S2 E1 $ W2 S5 W24 N5 W28 S26 E3 S19 FOP=[YR=2019] S6 E12 S7 E12 N3 FGR=[YR=2019] E13 FGR=[YR=2019] E13 FOP=[YR=2019] S3 E12 N7 E12 N6 W22 S10 W2$ E2 N20 W11 FST=[YR=2019] N5 W4 FST=[YR=2019] W4 S5 E4 N5$ S5 E4 $ W4 S20$ N20 W15 S20 E2$ W2 N10 W22$ E22 N10 E11 N5 E8 S5 E11 S10 E22 N19 E3 N26$.

EXTRA FEATURES

L N	OB/XF CODE	DESCRIPTION	BLD	CAP	L	W	UNITS	UT	Adj R	ADJ UNIT PRICE	ORIG COND	YEAR ON	YEAR ACTUAL	Q	% COND	OB/XF MKT VALUE	NOTES

LAND DESCRIPTION

TOTAL OB/XF 0

L N	USE CODE	CLS	LAND USE DESCRIPTION	CAP	R D	LOC ZONE	FRONT	DEPTH	TOT LND UTS	UNIT TYPE	D T	DPTH FACT	% COND	TOT ADJ	UNIT PRICE	ADJ UNIT PRICE	LAND VALUE	OTHER ADJUSTMENTS AND NOTES	YEAR	DENSITY	DECL	FRZ	YR	CONSRV

REVIEW DATE 07/31/2019 BY KK Total Acres: 11.16 Total Land Value: 2,790,000 Market: 0 Agricultural: 0 Common: 2,790,000 PRINTED 08/02/2023 BY SYS

LOT 34 & PT LOTS 35 & 36 IN
OR 2525/1141 BEING PARCEL 1A
OCEAN BREEZE FARMS PBK 2/19

PR AMELIA ISLAND PROPCO LLC
C/O PGIM REAL ESTATE, ATTN FRANCES L FELICE
MADISON, NJ 07940

2023

00-00-30-044B-0034-0000

BUILDING CHARACTERISTICS

ELEMENT	CD	CONSTRUCTION
Exterior Wall	16	WD FR STUC 70
Exterior Wall	10	ABOVE AVG 30
Roof Structur	03	GABLE/HIP 100
Roof Cover	03	COMP SHNGL 100
Interior Wall	05	DRYWALL 100
Interior Floo	11	CLAY TILE 70
Interior Floo	14	CARPET 30
Air Condition	03	CENTRAL 100
Heating Type	04	AIR DUCTED 100
Bedrooms		4 100
Bathrooms		4 100
Frame	02	WOOD FRAME 100
Stories	1.	1. 100
Units		0 100
Occupancy	00	NONE 100
Quality	05	Quality Level 05
DOR CODE	0600	RETIREMENT HOMES
MAP NUM		MKT AREA 01
NEIGHBORHOOD/LOC	1079.00	

AREA TYPE	TOTAL GROSS AREA	PCT OF BASE	TOT ADJ AREA	SUBAREA MARKET VALUE
BAS	3,026	100	3,026	461,713
FGR	300	55	165	25,176
FGR	300	55	165	25,176
FOP	2	30	1	153
FOP	2	30	1	153
FOP	208	30	62	9,461
FOP	208	30	62	9,461
FSP	86	40	34	5,188
FSP	86	40	34	5,188
FST	20	55	11	1,678
TOTALS	4,258		3,572	545,023

MARKET ADJUSTMENTS

TYPE	MDL	EFF. AREA	TOT ADJ PTS	EFF. BASE RATE	REPL. COST NEW	AYB	EYB	ECON	FNCT		NORM	% COND
2700	01	3,572	117.9090	154.67	552,481	2019	2019	0	0	0	1.35	98.65

14 DUPLEX – 0% - 0 Heated Area: 3026 HX Base Yr

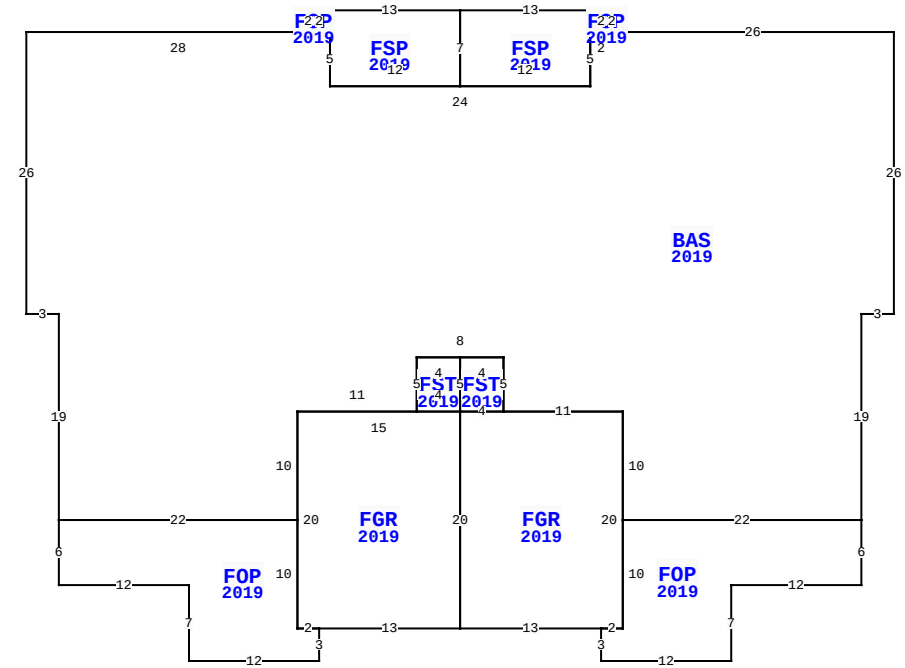

** This building has 11 Sub-Areas

AMELIA ISLAND PKWY, FERNANDINA BEACH

BLD DATE	07/31/2019	KK	LGL DATE	
XF DATE	07/31/2019	KK	LAND DATE	07/31/2019 KK
INC DATE			AG DATE	

NASSAU COUNTY PROPERTY

PAGE 14 of 19 2

VALUATION SUMMARY

VALUATION BY	STANDARD
Tax Group: 2	Tax Dist:
BUILDING MARKET VALUE	34,182,972
TOTAL MARKET OB/XF VALUE	1,641,374
TOTAL LAND VALUE - MARKET	2,790,000
TOTAL MARKET VALUE	38,614,346
SOH/AGL Deduction	0
ASSESSED VALUE	38,614,346
TOTAL EXEMPTION VALUE	0
BASE TAXABLE VALUE	38,614,346
TOTAL JUST VALUE	38,614,346
NCON VALUE	0
INCOME VALUE	
PREVIOUS YEAR MKT VALUE	35,563,161

PERMIT NUM	DESCRIPTION	AMT	ISSUED

SALES DATA

OFF RECORD Number	DATE	TYPE INST	Q U	V I	RSN CD	SALE PRICE
2525/1141	12/23/2021	SW	Q	I	05	58,457,800
GRANTOR: THE ASPIRE AT AMELIA						
GRANTEE: PR AMELIA ISLAND PR						
2088/0068	12/07/2016	SW	Q	V	05	2,240,000
GRANTOR: AMELIA HOLDING LLC						
GRANTEE: THE ASPIRE AT AMELI						

BUILDING NOTES

BUILDING DIMENSIONS

BAS=[YR=2019] W26 FOP=[YR=2019] N2 W1 FSP=[YR=2019] W13 FSP=[YR=2019] W13 FOP=[YR=2019] W1 S2 E1 N2$ S2 E1 S5 E12 N7$ S7 E12 N5 E1 N2$ S2 E1 $ W2 S5 W24 N5 W28 S26 E3 S19 FOP=[YR=2019] S6 E12 S7 E12 N3 FGR=[YR=2019] E13 FGR=[YR=2019] E13 FOP=[YR=2019] S3 E12 N7 E12 N6 W22 S10 W2$ E2 N20 W11 FST=[YR=2019] N5 W4 FST=[YR=2019] W4 S5 E4 N5$ S5 E4 $ W4 S20$ N20 W15 S20 E2$ W2 N10 W22$ E22 N10 E11 N5 E8 S5 E11 S10 E22 N19 E3 N26$.

EXTRA FEATURES

L N	OB/XF CODE	DESCRIPTION	BLD	CAP	L	W	UNITS	UT	Adj R	ADJ UNIT PRICE	ORIG COND	YEAR ON	YEAR ACTUAL	Q	% COND	OB/XF MKT VALUE	NOTES

LAND DESCRIPTION

TOTAL OB/XF 0

L N	USE CODE	CLS	LAND USE DESCRIPTION	CAP	R D	LOC ZONE	FRONT	DEPTH	TOT LND UTS	UNIT TYPE	D T	DPTH FACT	% COND	TOT ADJ	UNIT PRICE	ADJ UNIT PRICE	LAND VALUE	OTHER ADJUSTMENTS AND NOTES	YEAR	DENSITY	DECL	FRZ	YR	CONSRV

REVIEW DATE 07/31/2019 BY KK Total Acres: 11.16 Total Land Value: 2,790,000 Market: 0 Agricultural: 0 Common: 2,790,000 PRINTED 08/02/2023 BY SYS

LOT 34 & PT LOTS 35 & 36 IN
OR 2525/1141 BEING PARCEL 1A
OCEAN BREEZE FARMS PBK 2/19

PR AMELIA ISLAND PROPCO LLC
C/O PGIM REAL ESTATE, ATTN FRANCES L FELICE
MADISON, NJ 07940

2023

00-00-30-044B-0034-0000

BUILDING CHARACTERISTICS

ELEMENT	CD	CONSTRUCTION
Exterior Wall	10	ABOVE AVG 50
Exterior Wall	16	WD FR STUC 50
Roof Structur	03	GABLE/HIP 100
Roof Cover	03	COMP SHNGL 100
Interior Wall	05	DRYWALL 100
Interior Floo	11	CLAY TILE 70
Interior Floo	14	CARPET 30
Air Condition	03	CENTRAL 100
Heating Type	04	AIR DUCTED 100
Bedrooms		4 100
Bathrooms		4 100
Frame	02	WOOD FRAME 100
Stories	1.	1. 100
Units		0 100
Occupancy	00	NONE 100
Quality	05	Quality Level 05
DOR CODE	0600	RETIREMENT HOMES
MAP NUM		MKT AREA 01
NEIGHBORHOOD/LOC	1079.00	

AREA TYPE	TOTAL GROSS AREA	PCT OF BASE	TOT ADJ AREA	SUBAREA MARKET VALUE
BAS	3,026	100	3,026	462,181
FGR	300	55	165	25,202
FGR	300	55	165	25,202
FOP	2	30	1	153
FOP	2	30	1	153
FOP	208	30	62	9,470
FOP	208	30	62	9,470
FSP	86	40	34	5,193
FSP	86	40	34	5,193
FST	20	55	11	1,680
TOTALS	4,258		3,572	545,575

MARKET ADJUSTMENTS

TYPE	MDL	EFF. AREA	TOT ADJ PTS	EFF. BASE RATE	REPL. COST NEW	AYB	EYB	ECON	FNCT		NORM	% COND
2700	01	3,572	117.9090	154.67	552,481	2019	2019	0	0	0	1.25	98.75

15 DUPLEX – 0% - 0 Heated Area: 3026 HX Base Yr

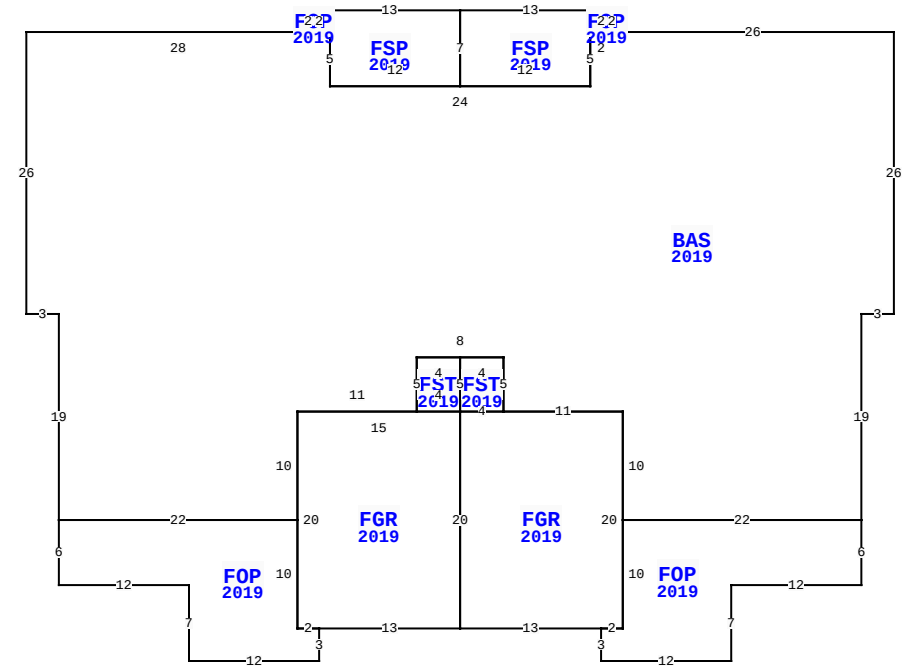

** This building has 11 Sub-Areas

AMELIA ISLAND PKWY, FERNANDINA BEACH

BLD DATE	07/31/2019	KK	LGL DATE	
XF DATE	07/31/2019	KK	LAND DATE	07/31/2019 KK
INC DATE			AG DATE	

NASSAU COUNTY PROPERTY

VALUATION SUMMARY

VALUATION BY	STANDARD
Tax Group: 2	Tax Dist:
BUILDING MARKET VALUE	34,182,972
TOTAL MARKET OB/XF VALUE	1,641,374
TOTAL LAND VALUE - MARKET	2,790,000
TOTAL MARKET VALUE	38,614,346
SOH/AGL Deduction	0
ASSESSED VALUE	38,614,346
TOTAL EXEMPTION VALUE	0
BASE TAXABLE VALUE	38,614,346
TOTAL JUST VALUE	38,614,346
NCON VALUE	0
INCOME VALUE	
PREVIOUS YEAR MKT VALUE	35,563,161

PERMIT NUM	DESCRIPTION	AMT	ISSUED

SALES DATA

OFF RECORD Number	DATE	TYPE INST	Q U	V I	RSN CD	SALE PRICE
2525/1141	12/23/2021	SW	Q	I	05	58,457,800
GRANTOR: THE ASPIRE AT AMELIA						
GRANTEE: PR AMELIA ISLAND PR						
2088/0068	12/07/2016	SW	Q	V	05	2,240,000
GRANTOR: AMELIA HOLDING LLC						
GRANTEE: THE ASPIRE AT AMELI						

BUILDING NOTES

BUILDING DIMENSIONS

BAS=[YR=2019] W26 FOP=[YR=2019] N2 W1 FSP=[YR=2019] W13 FSP=[YR=2019] W13 FOP=[YR=2019] W1 S2 E1 N2$ S2 E1 S5 E12 N7$ S7 E12 N5 E1 N2$ S2 E1 $ W2 S5 W24 N5 W28 S26 E3 S19 FOP=[YR=2019] S6 E12 S7 E12 N3 FGR=[YR=2019] E13 FGR=[YR=2019] E13 FOP=[YR=2019] S3 E12 N7 E12 N6 W22 S10 W2$ E2 N20 W11 FST=[YR=2019] N5 W4 FST=[YR=2019] W4 S5 E4 N5$ S5 E4 $ W4 S20$ N20 W15 S20 E2$ W2 N10 W22$ E22 N10 E11 N5 E8 S5 E11 S10 E22 N19 E3 N26$.

EXTRA FEATURES

L N	OB/XF CODE	DESCRIPTION	BLD	CAP	L	W	UNITS	UT	Adj R	ADJ UNIT PRICE	ORIG COND	YEAR ON	YEAR ACTUAL	Q	% COND	OB/XF MKT VALUE	NOTES

LAND DESCRIPTION

TOTAL OB/XF 0

L N	USE CODE	CLS	LAND USE DESCRIPTION	CAP	R D	LOC ZONE	FRONT	DEPTH	TOT LND UTS	UNIT TYPE	D T	DPTH FACT	% COND	TOT ADJ	UNIT PRICE	ADJ UNIT PRICE	LAND VALUE	OTHER ADJUSTMENTS AND NOTES	YEAR	DENSITY	DECL	FRZ	YR	CONSRV

REVIEW DATE 07/31/2019 BY KK Total Acres: 11.16 Total Land Value: 2,790,000 Market: 0 Agricultural: 0 Common: 2,790,000 PRINTED 08/02/2023 BY SYS

LOT 34 & PT LOTS 35 & 36 IN
OR 2525/1141 BEING PARCEL 1A
OCEAN BREEZE FARMS PBK 2/19

PR AMELIA ISLAND PROPCO LLC
C/O PGIM REAL ESTATE, ATTN FRANCES L FELICE
MADISON, NJ 07940

2023

00-00-30-044B-0034-0000

BUILDING CHARACTERISTICS

ELEMENT	CD	CONSTRUCTION
Exterior Wall	16	WD FR STUC 70
Exterior Wall	10	ABOVE AVG 30
Roof Structur	03	GABLE/HIP 100
Roof Cover	03	COMP SHNGL 100
Interior Wall	05	DRYWALL 100
Interior Floo	11	CLAY TILE 70
Interior Floo	14	CARPET 30
Air Condition	03	CENTRAL 100
Heating Type	04	AIR DUCTED 100
Bedrooms		4 100
Bathrooms		4 100
Frame	02	WOOD FRAME 100
Stories	1.	1. 100
Units		0 100
Occupancy	00	NONE 100
Quality	05	Quality Level 05
DOR CODE	0600	RETIREMENT HOMES
MAP NUM		MKT AREA 01
NEIGHBORHOOD/LOC	1079.00	

AREA TYPE	TOTAL GROSS AREA	PCT OF BASE	TOT ADJ AREA	SUBAREA MARKET VALUE
BAS	3,026	100	3,026	461,713
FGR	300	55	165	25,176
FGR	300	55	165	25,176
FOP	2	30	1	153
FOP	2	30	1	153
FOP	208	30	62	9,461
FOP	208	30	62	9,461
FSP	86	40	34	5,188
FSP	86	40	34	5,188
FST	20	55	11	1,678
TOTALS	4,258		3,572	545,023

MARKET ADJUSTMENTS

TYPE	MDL	EFF. AREA	TOT ADJ PTS	EFF. BASE RATE	REPL. COST NEW	AYB	EYB	ECON	FNCT		NORM	% COND
2700	01	3,572	117.9090	154.67	552,481	2019	2019	0	0	0	1.35	98.65

16 DUPLEX – 0% - 0 Heated Area: 3026 HX Base Yr

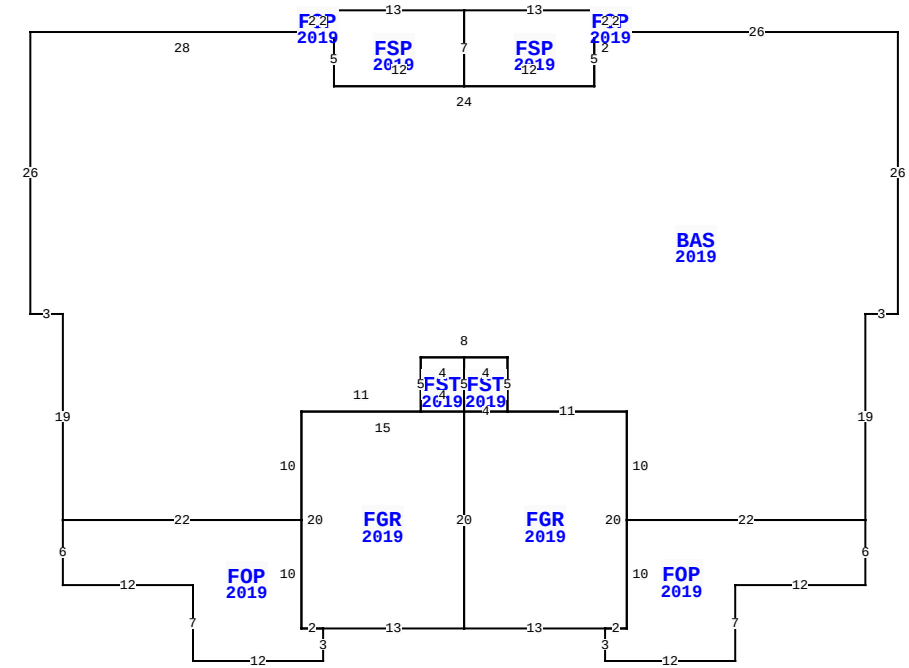

** This building has 11 Sub-Areas

AMELIA ISLAND PKWY, FERNANDINA BEACH

BLD DATE	07/31/2019	KK	LGL DATE	
XF DATE	07/31/2019	KK	LAND DATE	07/31/2019 KK
INC DATE			AG DATE	

NASSAU COUNTY PROPERTY

PAGE 16 of 19 2

VALUATION SUMMARY

VALUATION BY	STANDARD
Tax Group: 2	Tax Dist:
BUILDING MARKET VALUE	34,182,972
TOTAL MARKET OB/XF VALUE	1,641,374
TOTAL LAND VALUE - MARKET	2,790,000
TOTAL MARKET VALUE	38,614,346
SOH/AGL Deduction	0
ASSESSED VALUE	38,614,346
TOTAL EXEMPTION VALUE	0
BASE TAXABLE VALUE	38,614,346
TOTAL JUST VALUE	38,614,346
NCON VALUE	0
INCOME VALUE	
PREVIOUS YEAR MKT VALUE	35,563,161

PERMIT NUM	DESCRIPTION	AMT	ISSUED

SALES DATA

OFF RECORD Number	DATE	TYPE INST	Q U	V I	RSN CD	SALE PRICE
2525/1141	12/23/2021	SW	Q	I	05	58,457,800
GRANTOR: THE ASPIRE AT AMELIA						
GRANTEE: PR AMELIA ISLAND PR						
2088/0068	12/07/2016	SW	Q	V	05	2,240,000
GRANTOR: AMELIA HOLDING LLC						
GRANTEE: THE ASPIRE AT AMELI						

BUILDING NOTES

BUILDING DIMENSIONS

BAS=[YR=2019] W26 FOP=[YR=2019] N2 W1 FSP=[YR=2019] W13 FSP=[YR=2019] W13 FOP=[YR=2019] W1 S2 E1 N2$ S2 E1 S5 E12 N7$ S7 E12 N5 E1 N2$ S2 E1 $ W2 S5 W24 N5 W28 S26 E3 S19 FOP=[YR=2019] S6 E12 S7 E12 N3 FGR=[YR=2019] E13 FGR=[YR=2019] E13 FOP=[YR=2019] S3 E12 N7 E12 N6 W22 S10 W2$ E2 N20 W11 FST=[YR=2019] N5 W4 FST=[YR=2019] W4 S5 E4 N5$ S5 E4 $ W4 S20$ N20 W15 S20 E2$ W2 N10 W22$ E22 N10 E11 N5 E8 S5 E11 S10 E22 N19 E3 N26$.

EXTRA FEATURES

L N	OB/XF CODE	DESCRIPTION	BLD	CAP	L	W	UNITS	UT	Adj R	ADJ UNIT PRICE	ORIG COND	YEAR ON	YEAR ACTUAL	Q	% COND	OB/XF MKT VALUE	NOTES

LAND DESCRIPTION

TOTAL OB/XF 0

L N	USE CODE	CLS	LAND USE DESCRIPTION	CAP	R D	LOC ZONE	FRONT	DEPTH	TOT LND UTS	UNIT TYPE	D T	DPTH FACT	% COND	TOT ADJ	UNIT PRICE	ADJ UNIT PRICE	LAND VALUE	OTHER ADJUSTMENTS AND NOTES	YEAR	DENSITY	DECL	FRZ	YR	CONSRV

REVIEW DATE 07/31/2019 BY KK Total Acres: 11.16 Total Land Value: 2,790,000 Market: 0 Agricultural: 0 Common: 2,790,000 PRINTED 08/02/2023 BY SYS

LOT 34 & PT LOTS 35 & 36 IN
OR 2525/1141 BEING PARCEL 1A
OCEAN BREEZE FARMS PBK 2/19

PR AMELIA ISLAND PROPCO LLC
C/O PGIM REAL ESTATE, ATTN FRANCES L FELICE
MADISON, NJ 07940

2023

00-00-30-044B-0034-0000

BUILDING CHARACTERISTICS

ELEMENT	CD	CONSTRUCTION
Exterior Wall	16	WD FR STUC 70
Exterior Wall	10	ABOVE AVG 30
Roof Structur	03	GABLE/HIP 100
Roof Cover	03	COMP SHNGL 100
Interior Wall	05	DRYWALL 100
Interior Floo	11	CLAY TILE 70
Interior Floo	14	CARPET 30
Air Condition	03	CENTRAL 100
Heating Type	04	AIR DUCTED 100
Bedrooms		4 100
Bathrooms		4 100
Frame	02	WOOD FRAME 100
Stories	1.	1. 100
Units		0 100
Occupancy	00	NONE 100
Quality	05	Quality Level 05
DOR CODE	0600	RETIREMENT HOMES
MAP NUM		MKT AREA 01
NEIGHBORHOOD/LOC	1079.00	

AREA TYPE	TOTAL GROSS AREA	PCT OF BASE	TOT ADJ AREA	SUBAREA MARKET VALUE
BAS	3,026	100	3,026	461,713
FGR	300	55	165	25,176
FGR	300	55	165	25,176
FOP	2	30	1	153
FOP	2	30	1	153
FOP	208	30	62	9,461
FOP	208	30	62	9,461
FSP	86	40	34	5,188
FSP	86	40	34	5,188
FST	20	55	11	1,678
TOTALS	4,258		3,572	545,023

MARKET ADJUSTMENTS

TYPE	MDL	EFF. AREA	TOT ADJ PTS	EFF. BASE RATE	REPL. COST NEW	AYB	EYB	ECON	FNCT		NORM	% COND
2700	01	3,572	117.9090	154.67	552,481	2019	2019	0	0	0	1.35	98.65

17 DUPLEX – 0% - 0 Heated Area: 3026 HX Base Yr

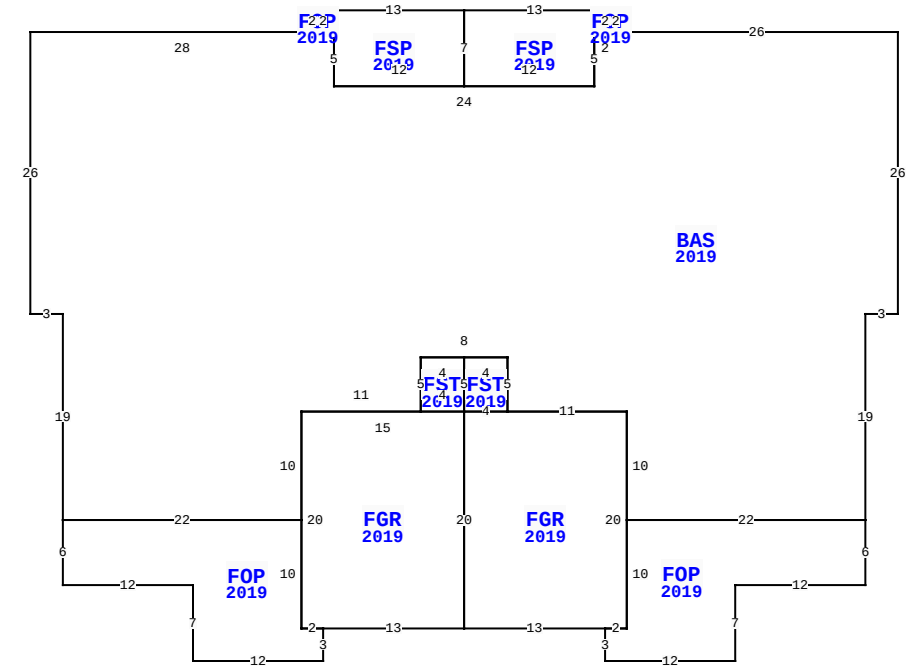

** This building has 11 Sub-Areas

AMELIA ISLAND PKWY, FERNANDINA BEACH

BLD DATE	07/31/2019	KK	LGL DATE	
XF DATE	07/31/2019	KK	LAND DATE	07/31/2019 KK
INC DATE			AG DATE	

NASSAU COUNTY PROPERTY

PAGE 17 of 19 2

VALUATION SUMMARY

VALUATION BY	STANDARD
Tax Group: 2	Tax Dist:
BUILDING MARKET VALUE	34,182,972
TOTAL MARKET OB/XF VALUE	1,641,374
TOTAL LAND VALUE - MARKET	2,790,000
TOTAL MARKET VALUE	38,614,346
SOH/AGL Deduction	0
ASSESSED VALUE	38,614,346
TOTAL EXEMPTION VALUE	0
BASE TAXABLE VALUE	38,614,346
TOTAL JUST VALUE	38,614,346
NCON VALUE	0
INCOME VALUE	
PREVIOUS YEAR MKT VALUE	35,563,161

PERMIT NUM	DESCRIPTION	AMT	ISSUED

SALES DATA

OFF RECORD Number	DATE	TYPE INST	Q / U	V / I	RSN CD	SALE PRICE
2525/1141	12/23/2021	SW	Q	I	05	58,457,800
GRANTOR: THE ASPIRE AT AMELIA						
GRANTEE: PR AMELIA ISLAND PR						
2088/0068	12/07/2016	SW	Q	V	05	2,240,000
GRANTOR: AMELIA HOLDING LLC						
GRANTEE: THE ASPIRE AT AMELI						

BUILDING NOTES

BUILDING DIMENSIONS

BAS=[YR=2019] W26 FOP=[YR=2019] N2 W1 FSP=[YR=2019] W13 FSP=[YR=2019] W13 FOP=[YR=2019] W1 S2 E1 N2$ S2 E1 S5 E12 N7$ S7 E12 N5 E1 N2$ S2 E1 $ W2 S5 W24 N5 W28 S26 E3 S19 FOP=[YR=2019] S6 E12 S7 E12 N3 FGR=[YR=2019] E13 FGR=[YR=2019] E13 FOP=[YR=2019] S3 E12 N7 E12 N6 W22 S10 W2$ E2 N20 W11 FST=[YR=2019] N5 W4 FST=[YR=2019] W4 S5 E4 N5$ S5 E4 $ W4 S20$ N20 W15 S20 E2$ W2 N10 W22$ E22 N10 E11 N5 E8 S5 E11 S10 E22 N19 E3 N26$.

EXTRA FEATURES

L N	OB/XF CODE	DESCRIPTION	BLD	CAP	L	W	UNITS	UT	Adj R	ADJ UNIT PRICE	ORIG COND	YEAR ON	YEAR ACTUAL	Q	% COND	OB/XF MKT VALUE	NOTES

LAND DESCRIPTION

TOTAL OB/XF 0

L N	USE CODE	CLS	LAND USE DESCRIPTION	CAP	R D	LOC ZONE	FRONT	DEPTH	TOT LND UTS	UNIT TYPE	D T	DPTH FACT	% COND	TOT ADJ	UNIT PRICE	ADJ UNIT PRICE	LAND VALUE	OTHER ADJUSTMENTS AND NOTES	YEAR	DENSITY	DECL	FRZ	YR	CONSRV

REVIEW DATE 07/31/2019 BY KK Total Acres: 11.16 Total Land Value: 2,790,000 Market: 0 Agricultural: 0 Common: 2,790,000 PRINTED 08/02/2023 BY SYS

LOT 34 & PT LOTS 35 & 36 IN
OR 2525/1141 BEING PARCEL 1A
OCEAN BREEZE FARMS PBK 2/19

PR AMELIA ISLAND PROPCO LLC
C/O PGIM REAL ESTATE, ATTN FRANCES L FELICE
MADISON, NJ 07940

2023

00-00-30-044B-0034-0000

BUILDING CHARACTERISTICS

ELEMENT	CD	CONSTRUCTION
Exterior Wall	16	WD FR STUC 70
Exterior Wall	10	ABOVE AVG 30
Roof Structur	03	GABLE/HIP 100
Roof Cover	03	COMP SHNGL 100
Interior Wall	05	DRYWALL 100
Interior Floo	11	CLAY TILE 70
Interior Floo	14	CARPET 30
Air Condition	03	CENTRAL 100
Heating Type	04	AIR DUCTED 100
Bedrooms		4 100
Bathrooms		4 100
Frame	02	WOOD FRAME 100
Stories	1.	1. 100
Units		0 100
Occupancy	00	NONE 100
Quality	05	Quality Level 05
DOR CODE	0600	RETIREMENT HOMES
MAP NUM		MKT AREA 01
NEIGHBORHOOD/LOC	1079.00	

AREA TYPE	TOTAL GROSS AREA	PCT OF BASE	TOT ADJ AREA	SUBAREA MARKET VALUE
BAS	3,026	100	3,026	461,713
FGR	300	55	165	25,176
FGR	300	55	165	25,176
FOP	2	30	1	153
FOP	2	30	1	153
FOP	208	30	62	9,461
FOP	208	30	62	9,461
FSP	86	40	34	5,188
FSP	86	40	34	5,188
FST	20	55	11	1,678
TOTALS	4,258		3,572	545,023

MARKET ADJUSTMENTS

TYPE	MDL	EFF. AREA	TOT ADJ PTS	EFF. BASE RATE	REPL. COST NEW	AYB	EYB	ECON	FNCT		NORM	% COND
2700	01	3,572	117.9090	154.67	552,481	2019	2019	0	0	0	1.35	98.65

18 DUPLEX – 0% - 0 Heated Area: 3026 HX Base Yr

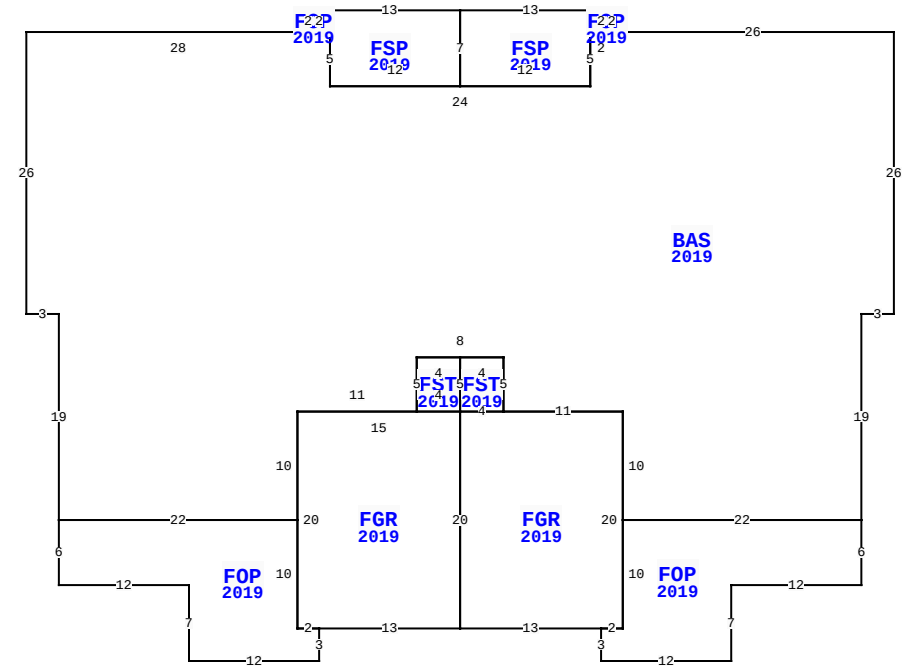

** This building has 11 Sub-Areas

AMELIA ISLAND PKWY, FERNANDINA BEACH

BLD DATE	07/31/2019	KK	LGL DATE	
XF DATE	07/31/2019	KK	LAND DATE	07/31/2019 KK
INC DATE			AG DATE	

NASSAU COUNTY PROPERTY

PAGE 18 of 19 2

VALUATION SUMMARY

VALUATION BY	STANDARD
Tax Group: 2	Tax Dist:
BUILDING MARKET VALUE	34,182,972
TOTAL MARKET OB/XF VALUE	1,641,374
TOTAL LAND VALUE - MARKET	2,790,000
TOTAL MARKET VALUE	38,614,346
SOH/AGL Deduction	0
ASSESSED VALUE	38,614,346
TOTAL EXEMPTION VALUE	0
BASE TAXABLE VALUE	38,614,346
TOTAL JUST VALUE	38,614,346
NCON VALUE	0
INCOME VALUE	
PREVIOUS YEAR MKT VALUE	35,563,161

PERMIT NUM	DESCRIPTION	AMT	ISSUED

SALES DATA

OFF RECORD Number	DATE	TYPE INST	Q U	V I	RSN CD	SALE PRICE
2525/1141	12/23/2021	SW	Q	I	05	58,457,800
GRANTOR: THE ASPIRE AT AMELIA						
GRANTEE: PR AMELIA ISLAND PR						
2088/0068	12/07/2016	SW	Q	V	05	2,240,000
GRANTOR: AMELIA HOLDING LLC						
GRANTEE: THE ASPIRE AT AMELI						

BUILDING NOTES

BUILDING DIMENSIONS

BAS=[YR=2019] W26 FOP=[YR=2019] N2 W1 FSP=[YR=2019] W13 FSP=[YR=2019] W13 FOP=[YR=2019] W1 S2 E1 N2$ S2 E1 S5 E12 N7$ S7 E12 N5 E1 N2$ S2 E1 $ W2 S5 W24 N5 W28 S26 E3 S19 FOP=[YR=2019] S6 E12 S7 E12 N3 FGR=[YR=2019] E13 FGR=[YR=2019] E13 FOP=[YR=2019] S3 E12 N7 E12 N6 W22 S10 W2$ E2 N20 W11 FST=[YR=2019] N5 W4 FST=[YR=2019] W4 S5 E4 N5$ S5 E4 $ W4 S20$ N20 W15 S20 E2$ W2 N10 W22$ E22 N10 E11 N5 E8 S5 E11 S10 E22 N19 E3 N26$.

EXTRA FEATURES

L N	OB/XF CODE	DESCRIPTION	BLD	CAP	L	W	UNITS	UT	Adj R	ADJ UNIT PRICE	ORIG COND	YEAR ON	YEAR ACTUAL	Q	% COND	OB/XF MKT VALUE	NOTES

LAND DESCRIPTION

TOTAL OB/XF 0

L N	USE CODE	CLS	LAND USE DESCRIPTION	CAP	R D	LOC ZONE	FRONT	DEPTH	TOT LND UTS	UNIT TYPE	D T	DPTH FACT	% COND	TOT ADJ	UNIT PRICE	ADJ UNIT PRICE	LAND VALUE	OTHER ADJUSTMENTS AND NOTES	YEAR	DENSITY	DECL	FRZ	YR	CONSRV

REVIEW DATE 07/31/2019 BY KK Total Acres: 11.16 Total Land Value: 2,790,000 Market: 0 Agricultural: 0 Common: 2,790,000 PRINTED 08/02/2023 BY SYS

LOT 34 & PT LOTS 35 & 36 IN
OR 2525/1141 BEING PARCEL 1A
OCEAN BREEZE FARMS PBK 2/19

PR AMELIA ISLAND PROPCO LLC
C/O PGIM REAL ESTATE, ATTN FRANCES L FELICE
MADISON, NJ 07940

2023

00-00-30-044B-0034-0000

BUILDING CHARACTERISTICS

ELEMENT	CD	CONSTRUCTION
Exterior Wall	10	ABOVE AVG 50
Exterior Wall	16	WD FR STUC 50
Roof Structur	03	GABLE/HIP 100
Roof Cover	03	COMP SHNGL 100
Interior Wall	05	DRYWALL 100
Interior Floo	11	CLAY TILE 70
Interior Floo	14	CARPET 30
Air Condition	03	CENTRAL 100
Heating Type	04	AIR DUCTED 100
Bedrooms		4 100
Bathrooms		4 100
Frame	02	WOOD FRAME 100
Stories	1.	1. 100
Units		0 100
Occupancy	00	NONE 100
Quality	05	Quality Level 05
DOR CODE	0600	RETIREMENT HOMES
MAP NUM		MKT AREA 01
NEIGHBORHOOD/LOC	1079.00	

AREA TYPE	TOTAL GROSS AREA	PCT OF BASE	TOT ADJ AREA	SUBAREA MARKET VALUE
BAS	3,026	100	3,026	462,181
FGR	300	55	165	25,202
FGR	300	55	165	25,202
FOP	2	30	1	153
FOP	2	30	1	153
FOP	208	30	62	9,470
FOP	208	30	62	9,470
FSP	86	40	34	5,193
FSP	86	40	34	5,193
FST	20	55	11	1,680
TOTALS	4,258		3,572	545,575

MARKET ADJUSTMENTS

TYPE	MDL	EFF. AREA	TOT ADJ PTS	EFF. BASE RATE	REPL. COST NEW	AYB	EYB	ECON	FNCT		NORM	% COND
2700	01	3,572	117.9090	154.67	552,481	2019	2019	0	0	0	1.25	98.75

19 DUPLEX – 0% - 0 Heated Area: 3026 HX Base Yr

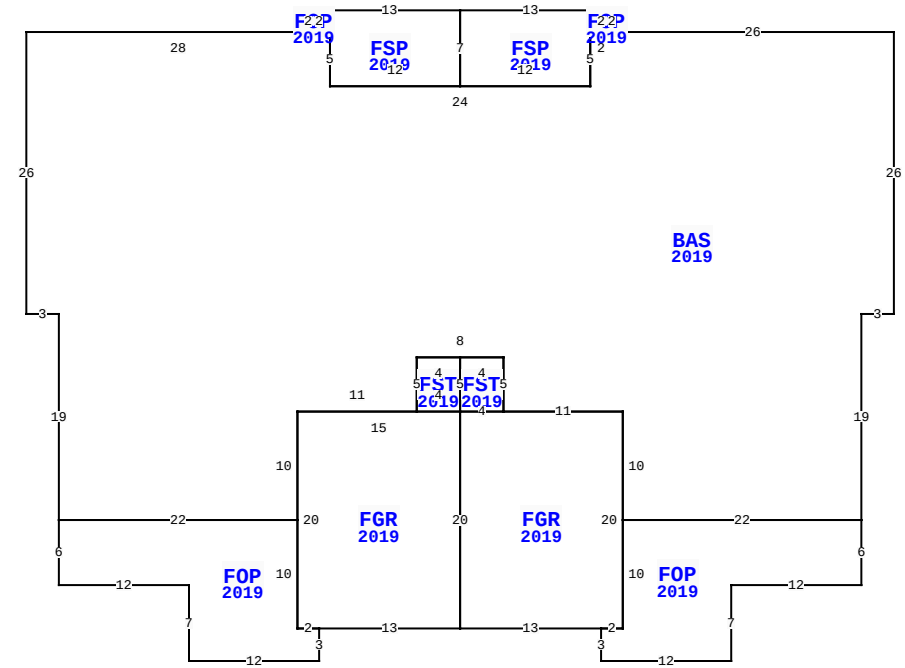

** This building has 11 Sub-Areas

AMELIA ISLAND PKWY, FERNANDINA BEACH

BLD DATE	07/31/2019	KK	LGL DATE	
XF DATE	07/31/2019	KK	LAND DATE	07/31/2019 KK
INC DATE			AG DATE	

NASSAU COUNTY PROPERTY

VALUATION SUMMARY

VALUATION BY	STANDARD
Tax Group: 2	Tax Dist:
BUILDING MARKET VALUE	34,182,972
TOTAL MARKET OB/XF VALUE	1,641,374
TOTAL LAND VALUE - MARKET	2,790,000
TOTAL MARKET VALUE	38,614,346
SOH/AGL Deduction	0
ASSESSED VALUE	38,614,346
TOTAL EXEMPTION VALUE	0
BASE TAXABLE VALUE	38,614,346
TOTAL JUST VALUE	38,614,346
NCON VALUE	0
INCOME VALUE	
PREVIOUS YEAR MKT VALUE	35,563,161

PERMIT NUM	DESCRIPTION	AMT	ISSUED

SALES DATA

OFF RECORD Number	DATE	TYPE INST	Q U	V I	RSN CD	SALE PRICE
2525/1141	12/23/2021	SW	Q	I	05	58,457,800
GRANTOR: THE ASPIRE AT AMELIA						
GRANTEE: PR AMELIA ISLAND PR						
2088/0068	12/07/2016	SW	Q	V	05	2,240,000
GRANTOR: AMELIA HOLDING LLC						
GRANTEE: THE ASPIRE AT AMELI						

BUILDING NOTES

BUILDING DIMENSIONS

BAS=[YR=2019] W26 FOP=[YR=2019] N2 W1 FSP=[YR=2019] W13 FSP=[YR=2019] W13 FOP=[YR=2019] W1 S2 E1 N2$ S2 E1 S5 E12 N7$ S7 E12 N5 E1 N2$ S2 E1 $ W2 S5 W24 N5 W28 S26 E3 S19 FOP=[YR=2019] S6 E12 S7 E12 N3 FGR=[YR=2019] E13 FGR=[YR=2019] E13 FOP=[YR=2019] S3 E12 N7 E12 N6 W22 S10 W2$ E2 N20 W11 FST=[YR=2019] N5 W4 FST=[YR=2019] W4 S5 E4 N5$ S5 E4 $ W4 S20$ N20 W15 S20 E2$ W2 N10 W22$ E22 N10 E11 N5 E8 S5 E11 S10 E22 N19 E3 N26$.

EXTRA FEATURES

L N	OB/XF CODE	DESCRIPTION	BLD	CAP	L	W	UNITS	UT	Adj R	ADJ UNIT PRICE	ORIG COND	YEAR ON	YEAR ACTUAL	Q	% COND	OB/XF MKT VALUE	NOTES

LAND DESCRIPTION

TOTAL OB/XF 0

L N	USE CODE	CLS	LAND USE DESCRIPTION	CAP	R D	LOC ZONE	FRONT	DEPTH	TOT LND UTS	UNIT TYPE	D T	DPTH FACT	% COND	TOT ADJ	UNIT PRICE	ADJ UNIT PRICE	LAND VALUE	OTHER ADJUSTMENTS AND NOTES	YEAR	DENSITY	DECL	FRZ	YR	CONSRV

REVIEW DATE 07/31/2019 BY KK Total Acres: 11.16 Total Land Value: 2,790,000 Market: 0 Agricultural: 0 Common: 2,790,000 PRINTED 08/02/2023 BY SYS