SEC 3-2N-28 LOTS 23,24
IN OR 2532/240
(EX S 27.5 FT OF 23 FOR R/W

WRT JR TRUST/TENNILLE WILSON R JR TRUSTEE
2711 SEMINOLE AVE
FERNANDINA BEACH, FL 32034

2023

00-00-30-044A-0023-0000

NASSAU COUNTY PROPERTY

BUILDING CHARACTERISTICS

ELEMENT	CD	CONSTRUCTION
Exterior Wall	10	ABOVE AVG 100
Roof Structur	08	IRREGULAR 100
Roof Cover	11	SLATE 100
Interior Wall	05	DRYWALL 100
Interior Floo	12	HARDWOOD 60
Interior Floo	14	CARPET 40
Air Condition	03	CENTRAL 100
Heating Type	04	AIR DUCTED 100
Bedrooms		4 100
Bathrooms		3.5 100
Frame	02	WOOD FRAME 100
Stories	2.	2. 100
Units		0 100
Quality	05	Quality Level 05
DOR CODE	0100	SINGLE FAMILY
MAP NUM		MKT AREA 02
NEIGHBORHOOD/LOC	2021.00	

AREA TYPE	TOTAL GROSS AREA	PCT OF BASE	TOT ADJ AREA	SUBAREA MARKET VALUE
BAS	3,033	100	3,033	541,654
FGR	831	55	457	81,614
FOP	44	30	13	2,321
FOP	66	30	20	3,572
FOP	238	30	71	12,680
FOP	512	30	154	27,502
FSP	706	40	282	50,361
FUS	1,247	100	1,247	222,697
TOTALS	6,677		5,277	942,402

MARKET ADJUSTMENTS

TYPE	MDL	EFF. AREA	TOT ADJ PTS	EFF. BASE RATE	REPL. COST NEW	AYB	EYB	ECON	FNCT		NORM	% COND
0900	11	5,277	155.0400	184.11	971,548	2015	2015	0	0	0	3.00	97.00

2 SNGL FAM – 100% - 2016 Heated Area: 4280 HX Base Yr 2016

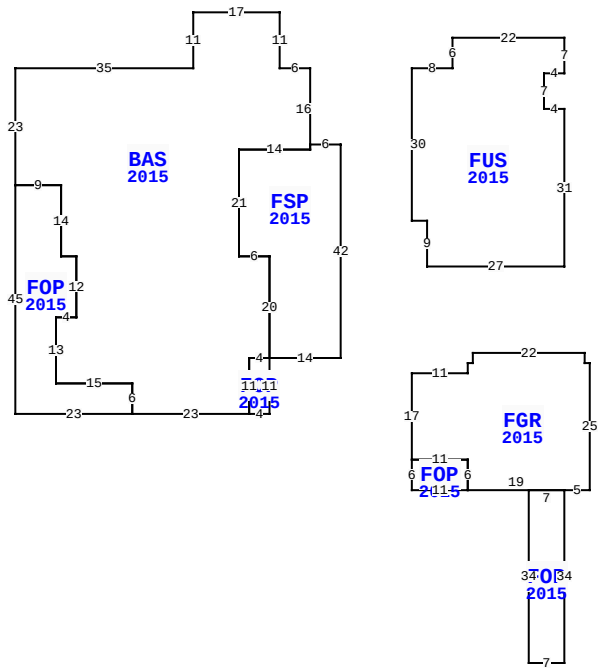

2711 SEMINOLE AV, FERNANDINA BEACH

BLD DATE		LGL DATE	
XF DATE		LAND DATE	
INC DATE		AG DATE	

VALUATION SUMMARY

VALUATION BY		STANDARD
Tax Group: 8	Tax Dist:	
BUILDING MARKET VALUE		942,402
TOTAL MARKET OB/XF VALUE		16,587
TOTAL LAND VALUE - MARKET		719,250
TOTAL MARKET VALUE		1,678,239
SOH/AGL Deduction		680,981
ASSESSED VALUE		997,258
TOTAL EXEMPTION VALUE	HX HB	50,000
BASE TAXABLE VALUE		947,258
TOTAL JUST VALUE		1,678,239
NCON VALUE		0
INCOME VALUE		
PREVIOUS YEAR MKT VALUE		1,488,759

PERMIT NUM	DESCRIPTION	AMT	ISSUED
B1529967	NEW CONSTR	533,611	02/01/2015

SALES DATA

OFF RECORD Number	DATE	TYPE INST	Q U	V I	RSN CD	SALE PRICE
2532/0240	1/19/2022	WD	U	I	11	100
GRANTOR: TENNILLE WILSON R JR						
GRANTEE: WRT JR TRUST						
2426/1349	1/19/2021	WD	U	I	11	100
GRANTOR: TENNILLE WILSON JR						
GRANTEE: WRT JR TRUST						

BUILDING NOTES

BUILDING DIMENSIONS

BAS=[YR=2015] W6 N11 W17 S11 W35 S23 FOP=[YR=2015] S45 E23 N6 W15 N13 E4 N12 W3 N14 W9$ E9 S14 E3 S12 W4 S13 E15 S6 E23 FOP=[YR=2015] E4 N11 W4 S11$ N11 E4 FSP=[YR=2015] E14 N42 W6 S1 W14 S21 E6 S20$ N20 W6 N21 E14 N16$ PTR=E20 FUS=[YR=2015] E8 N6 E22 S7 W4 S7 E4 S31 W27 N9 W3 N30$ W20$ PTR= E20 S60 FGR=[YR=2015] E11N2 E1 N2 E22 S2 E1 S25 W5 FOP=[YR=2015] S34 W7 N34 E7$ W19 FOP=[YR=2015] W11 N6 E11 S6$ N6 W11 N17$ N60 W20$.

EXTRA FEATURES

LN	OB/XF CODE	DESCRIPTION	BLD	CAP	L	W	UNITS	UT	Adj R	ADJ UNIT PRICE	ORIG COND	YEAR ON	YEAR ACTUAL	Q	% COND	OB/XF MKT VALUE	NOTES
2	0825	BRICK	0	100	0	0	909.00	SF	12.50	12.50	100	2015	2015	3	99	11,249	
3	0825	BRICK	0	100	0	0	375.00	SF	12.50	12.50	100	2015	2015	3	99	4,641	
4	1127	BRICK 8"	0	100	0	0	64.00	SF	11.00	11.00	100	2015	2015	3	99	697	

LAND DESCRIPTION

TOTAL OB/XF 16,587

LN	USE CODE	CLS	LAND USE DESCRIPTION	CAP	RD	LOC ZONE	FRONT	DEPTH	TOT LND UTS	UNIT TYPE	DT	DPTH FACT	% COND	TOT ADJ	UNIT PRICE	ADJ UNIT PRICE	LAND VALUE	OTHER ADJUSTMENTS AND NOTES	YEAR	DENSITY	DECL	FRZ	YR	CONSRV
1	000115	C	SFR ACRES	100		RS-2	0.00	0.00	4.11	AC		1.00	1.00	0.70	250,000.00	175,000.00	719,250							

REVIEW DATE 05/01/2020 BY DJA Total Acres: 4.11 Total Land Value: 719,250 Market: 0 Agricultural: 0 Common: 719,250 PRINTED 08/02/2023 BY SYS