LOT 31
RIVERBEND PBK 8/182

BELL STEVN & JENNIFER
2973 RIVERBEND WALK
FERNANDINA BEACH, FL 32034

2023

00-00-30-0440-0031-0000

NASSAU COUNTY PROPERTY

BUILDING CHARACTERISTICS

ELEMENT	CD	CONSTRUCTION
Exterior Wall	10	ABOVE AVG 100
Roof Structur	08	IRREGULAR 100
Roof Cover	03	COMP SHNGL 100
Interior Wall	05	DRYWALL 100
Interior Floo	12	HARDWOOD 70
Interior Floo	11	CLAY TILE 30
Air Condition	03	CENTRAL 100
Heating Type	04	AIR DUCTED 100
Bedrooms		5 100
Bathrooms		4 100
Frame	02	WOOD FRAME 100
Stories	0	0 100
Units		0 100
Quality	03	Quality Level 03
DOR CODE	0100	SINGLE FAMILY
MAP NUM		MKT AREA 01
NEIGHBORHOOD/LOC	2038.00	

AREA TYPE	TOTAL GROSS AREA	PCT OF BASE	TOT ADJ AREA	SUBAREA MARKET VALUE
BAL	161	15	24	3,533
BAS	2,961	100	2,961	435,918
FGR	620	55	341	50,202
FOP	161	30	48	7,067
FOP	252	30	76	11,189
FUS	757	100	757	111,446
STP	24	10	2	294
STR	80	10	8	1,178
TOTALS	5,016		4,217	620,827

MARKET ADJUSTMENTS

TYPE	MDL	EFF. AREA	TOT ADJ PTS	EFF. BASE RATE	REPL. COST NEW	AYB	EYB	ECON	FNCT		NORM	% COND
0500	01	4,217	103.3120	147.22	620,827	2022	2022	0	0	0	0.00	100.00

1 SFR CUST – 100% - 2023 Heated Area: 3718 HX Base Yr 2023

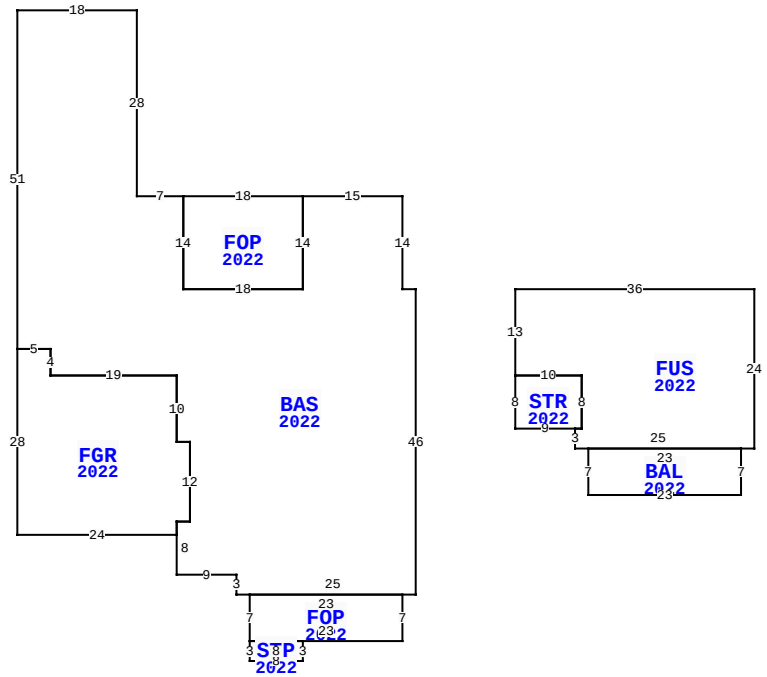

2973 RIVERBEND WALK, FERNANDINA BEACH

BLD DATE		LGL DATE	
XF DATE		LAND DATE	
INC DATE		AG DATE	

VALUATION SUMMARY

VALUATION BY		STANDARD
Tax Group: 2	Tax Dist:	
BUILDING MARKET VALUE		620,827
TOTAL MARKET OB/XF VALUE		13,092
TOTAL LAND VALUE - MARKET		190,000
TOTAL MARKET VALUE		823,919
SOH/AGL Deduction		118,071
ASSESSED VALUE		705,848
TOTAL EXEMPTION VALUE	HX HB	50,000
BASE TAXABLE VALUE		655,848
TOTAL JUST VALUE		823,919
NCON VALUE		634,139
INCOME VALUE		
PREVIOUS YEAR MKT VALUE		190,000

PERMIT NUM	DESCRIPTION	AMT	ISSUED
20200771	NEW CONSTR	500,530	12/15/2020

SALES DATA

OFF RECORD Number	DATE	TYPE INST	Q / U	V / I	RSN CD	SALE PRICE
2558/0100	4/20/2022	WD	Q	I	02	786,100
GRANTOR: NEW ATLANTIC BUILDERS						
GRANTEE: BELL STEVN & JENNIF						
2130/1053	6/28/2017	WD	Q	V	01	173,000
GRANTOR: SUMMERWOODS OF AMELIA						
GRANTEE: NEW ATLANTIC BUILDE						

BUILDING NOTES

BUILDING DIMENSIONS

BAS=[YR=2022] W2 N14 W15 FOP=[YR=2022] W18 S14 E18 N14$ S14 W18 N14 W7 N28 W18 S51 FGR=[YR=2022] S28 E24 N2 E2 N12 W2 N10 W19 N4 W5$ E5 S4 E19 S10 E2 S12 W2 S8 E9 S3 E2 FOP=[YR=2022] S7 STP=[YR=2022] S3 E8 N3 W8 $ E23 N7 W23$ E25 N46$ PTR=E15 FUS=[YR=2022] E36 S24 W2 BAL=[YR=2022] S7 W23 N7 E23$ W25 N3 STR=[YR=2022] W9 N8 E10 S8 W1$ E1 N8 W10 N13$ W15$.

EXTRA FEATURES

LN	OB/XF CODE	DESCRIPTION	BLD	CAP	L	W	UNITS	UT	Adj R	ADJ UNIT PRICE	ORIG COND	YEAR ON	YEAR ACTUAL	Q	% COND	OB/XF MKT VALUE	NOTES
1	0855	CONC PAVER	0	100	0	0	1,284.00	SF	10.00	10.00	100	2022	2022	3	100	12,840	
2	0475	VF 4 SBPL	0	100	0	0	18.00	LF	14.00	14.00	100	2022	2022	3	100	252	

LAND DESCRIPTION

TOTAL OB/XF 13,092

LN	USE CODE	CLS	LAND USE DESCRIPTION	CAP	RD	LOC ZONE	FRONT	DEPTH	TOT LND UTS	UNIT TYPE	DT	DPTH FACT	% COND	TOT ADJ	UNIT PRICE	ADJ UNIT PRICE	LAND VALUE	OTHER ADJUSTMENTS AND NOTES	YEAR	DENSITY	DECL	FRZ	YR	CONSRV
1	000100	C	SFR	100			0.00	0.00	1.00	LT		1.00	1.00	1.00	190,000.00	190,000.00	190,000							

REVIEW DATE 04/12/2023 BY TW Total Acres: 0.00 Total Land Value: 190,000 Market: 0 Agricultural: 0 Common: 190,000 PRINTED 08/02/2023 BY SYS