LOT 8
IN OR 1782/1969
OAK RIDGE PB 5/127

MCCOY ALTON A & AMELIA A
2132 OAK RIDGE DR
FERNANDINA BEACH, FL 32034

2023

00-00-30-043A-0008-0000

NASSAU COUNTY PROPERTY

BUILDING CHARACTERISTICS

ELEMENT	CD	CONSTRUCTION
Exterior Wall	10	ABOVE AVG 100
Roof Structur	03	GABLE/HIP 100
Roof Cover	03	COMP SHNGL 100
Interior Wall	05	DRYWALL 100
Interior Floo	12	HARDWOOD 70
Interior Floo	15	HARDTILE 30
Air Condition	03	CENTRAL 100
Heating Type	04	AIR DUCTED 100
Bedrooms		3 100
Bathrooms		2.5 100
Frame	02	WOOD FRAME 100
Stories	2.	2. 100
Units		0 100
BUD8 Adjustme	05	DIST 1A 100
Occupancy	00	NONE 100
Quality	06	Quality Level 06
DOR CODE	0100	SINGLE FAMILY
MAP NUM		MKT AREA 02
NEIGHBORHOOD/LOC	2008.00	

AREA TYPE	TOTAL GROSS AREA	PCT OF BASE	TOT ADJ AREA	SUBAREA MARKET VALUE
BAS	1,302	100	1,302	172,350
FGR	441	55	243	32,167
FOP	54	30	16	2,118
FUS	534	100	534	70,687
PTO	143	5	7	927
TOTALS	2,474		2,102	278,249

MARKET ADJUSTMENTS

TYPE	MDL	EFF. AREA	TOT ADJ PTS	EFF. BASE RATE	REPL. COST NEW	AYB	EYB	ECON	FNCT		NORM	% COND
0900	01	2,102	132.3098	157.12	330,266	1987	1987	0	0	0	15.75	84.25

1 SNGL FAM – 100% - 2022 Heated Area: 1836 HX Base Yr

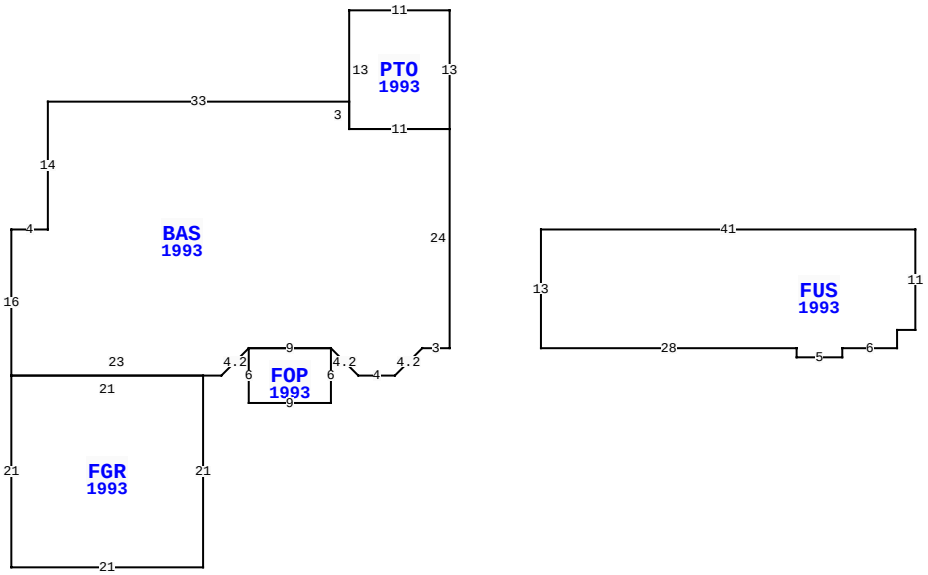

2132 OAK RIDGE DR, FERNANDINA BEACH

BLD DATE		LGL DATE	
XF DATE		LAND DATE	
INC DATE		AG DATE	

VALUATION SUMMARY

VALUATION BY		STANDARD
Tax Group: 8	Tax Dist:	
BUILDING MARKET VALUE		278,249
TOTAL MARKET OB/XF VALUE		13,709
TOTAL LAND VALUE - MARKET		115,000
TOTAL MARKET VALUE		406,958
SOH/AGL Deduction		0
ASSESSED VALUE		406,958
TOTAL EXEMPTION VALUE	13	406,958
BASE TAXABLE VALUE		0
TOTAL JUST VALUE		406,958
NCON VALUE		0
INCOME VALUE		
PREVIOUS YEAR MKT VALUE		416,536

PERMIT NUM	DESCRIPTION	AMT	ISSUED
4874	SWIM POOL	7,800	05/10/1988

SALES DATA

OFF RECORD Number	DATE	TYPE INST	Q U	V I	RSN CD	SALE PRICE
1782/1969	3/07/2012	WD	U	I	12	101,900
GRANTOR: US BANK NATIONAL ASSO						
GRANTEE: MCCOY ALTON A & AME						
1704/1728	10/18/2010	CT	U	I	18	100
GRANTOR: CLERK OF COURT						
GRANTEE: U S BANK NATIONAL A						

BUILDING NOTES

BUILDING DIMENSIONS

PTO=[YR=1993] N13 W11 S13 E11$ BAS=[YR=1993] W11 N3 W33 S14 W4 S16 FGR=[YR=1993] S21 E21 N21 W21 $ E23 R3 U3 FOP=[YR=1993] S6E9N6W9$E9 D3 R3 E4 U3 R3 E3 N24$ PTR= S11E10 FUS=[YR=1993] E41 S11 W2S2 W6 S1 W5 N1 W28 N13$ W10N11$.

EXTRA FEATURES

LN	OB/XF CODE	DESCRIPTION	BLD	CAP	L	W	UNITS	UT	Adj R	ADJ UNIT PRICE	ORIG COND	YEAR ON	YEAR ACTUAL	Q	% COND	OB/XF MKT VALUE	NOTES
1	0500	FP-PRE FAB	0	100	0	0	1.00	UT	3,500.00	3,500.00	100	1987	1987	3	64	2,240	
2	0810	CONCRETE A	0	100	49	16	784.00	SF	6.50	6.50	100	1987	1987	3	54.5	2,777	
3	0810	CONCRETE A	0	100	30	3	90.00	SF	6.50	6.50	100	2007	2007	3	89	521	
4	0861	POOL GUNIT	0	100	31	17	527.00	SF	17.00	17.00	100	1988	1988	3	20	1,792	
5	0820	WOOD WALK	0	100	0	0	612.00	SF	11.75	11.75	100	1988	1988	3	40	2,876	
7	0910	SCRN RM L	0	100	0	0	1,281.00	SF	3.00	3.00	100	1988	1988	3	20	769	
8	0810	CONCRETE A	0	100	0	0	338.00	SF	6.50	6.50	100	1995	1995	3	72	1,582	
9	0940	SHEDS/PORT	0	100	8	12	96.00	SF	30.00	30.00	100	2008	2008	3	40	1,152	

LAND DESCRIPTION

TOTAL OB/XF 13,709

LN	USE CODE	CLS	LAND USE DESCRIPTION	CAP	RD	LOC ZONE	FRONT	DEPTH	TOT LND UTS	UNIT TYPE	DT	DPTH FACT	% COND	TOT ADJ	UNIT PRICE	ADJ UNIT PRICE	LAND VALUE	OTHER ADJUSTMENTS AND NOTES	YEAR	DENSITY	DECL	FRZ	YR	CONSRV
1	000100	C	SFR	100	0006	RG-1	0.00	0.00	1.00	LT		1.00	1.00	1.00	115,000.00	115,000.00	115,000							

REVIEW DATE 11/01/2017 BY DJX Total Acres: 0.00 Total Land Value: 115,000 Market: 0 Agricultural: 0 Common: 115,000 PRINTED 08/02/2023 BY SYS