LOT 12
IN OR 2024/98
OAK CREST #2 PB 5/204

GREEN RALEIGH L & EMILY F
1403 SOUTH SNAPPER LN
FERNANDINA BEACH, FL 32034

2023

00-00-30-0411-0012-0000

NASSAU COUNTY PROPERTY

BUILDING CHARACTERISTICS

ELEMENT	CD	CONSTRUCTION
Exterior Wall	10	ABOVE AVG 100
Roof Structur	03	GABLE/HIP 100
Roof Cover	03	COMP SHNGL 100
Interior Wall	05	DRYWALL 100
Interior Floo	12	HARDWOOD 60
Interior Floo	11	CLAY TILE 40
Air Condition	03	CENTRAL 100
Heating Type	04	AIR DUCTED 100
Bedrooms		4 100
Bathrooms		2.5 100
Frame	02	WOOD FRAME 100
Stories	1.5	1.5 100
Units		0 100
Occupancy	00	NONE 100
Quality	06	Quality Level 06
DOR CODE	0100	SINGLE FAMILY
MAP NUM		MKT AREA 02
NEIGHBORHOOD/LOC	2008.00	

AREA TYPE	TOTAL GROSS AREA	PCT OF BASE	TOT ADJ AREA	SUBAREA MARKET VALUE
BAS	1,820	100	1,820	248,356
FOP	210	30	63	8,597
FST	84	55	46	6,277
FUS	242	100	242	33,023
USP	220	30	66	9,006
TOTALS	2,576		2,237	305,260

MARKET ADJUSTMENTS

TYPE	MDL	EFF. AREA	TOT ADJ PTS	EFF. BASE RATE	REPL. COST NEW	AYB	EYB	ECON	FNCT		NORM	% COND
0900	01	2,237	132.0844	156.85	350,873	1989	1995	0	0	0	13.00	87.00

1 SNGL FAM – 100% - 2017 Heated Area: 2062 HX Base Yr 2017

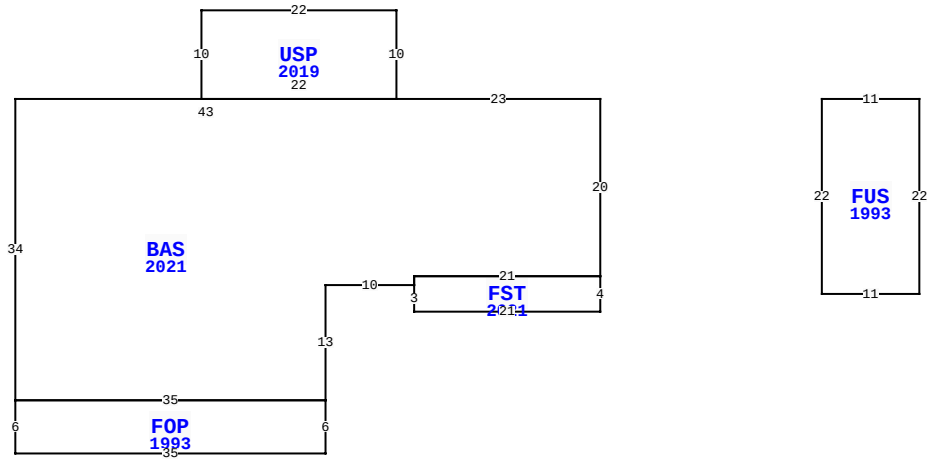

1403 SOUTH SNAPPER LN, FERNANDINA BEACH

BLD DATE		LGL DATE	
XF DATE		LAND DATE	
INC DATE		AG DATE	

VALUATION SUMMARY

VALUATION BY		STANDARD
Tax Group: 8	Tax Dist:	
BUILDING MARKET VALUE		305,260
TOTAL MARKET OB/XF VALUE		3,949
TOTAL LAND VALUE - MARKET		115,000
TOTAL MARKET VALUE		424,209
SOH/AGL Deduction		0
ASSESSED VALUE		424,209
TOTAL EXEMPTION VALUE	HX HB	50,000
BASE TAXABLE VALUE		374,209
TOTAL JUST VALUE		424,209
NCON VALUE		0
INCOME VALUE		
PREVIOUS YEAR MKT VALUE		442,500

PERMIT NUM	DESCRIPTION	AMT	ISSUED
B1909975	SCRNROOM	2,000	09/23/2019
B1632789	WINDOWS	7,100	08/01/2016
B24613	REMODEL	7,200	04/01/2011
5746	NEW CONSTR	2,250	02/28/1989
2932	H/AC	2,400	02/27/1989
5478	NEW CONSTR	51,803	01/27/1989

SALES DATA

OFF RECORD Number	DATE	TYPE INST	Q / U	V / I	RSN CD	SALE PRICE
2024/0098	1/15/2016	WD	Q	I	01	289,000
GRANTOR: BOSTON JOHN M II & KE						
GRANTEE: GREEN RALEIGH L & E						
1734/0141	3/29/2011	WD	U	I	11	130,000
GRANTOR: CITY & POLICE CREDIT						
GRANTEE: BOSTON JOHN M II &						

BUILDING NOTES

BUILDING DIMENSIONS

BAS=[YR=2021] W23 USP=[YR=2019] N10 W22 S10 E22$ W43 S34 FOP=[YR=1993] S6 E35 N6 W35$ E35 N13 E10 FST=[YR=2021] S3 E21 N4 W21 S1$ N1 E21 N20$ PTR=E25 FUS=[YR=1993] S22 E11 N22 W11$ W25$.

EXTRA FEATURES

LN	OB/XF CODE	DESCRIPTION	BLD	CAP	L	W	UNITS	UT	Adj R	ADJ UNIT PRICE	ORIG COND	YEAR ON	YEAR ACTUAL	Q	% COND	OB/XF MKT VALUE	NOTES
1	0810	CONCRETE A	0	100	61	16	976.00	SF	6.50	6.50	100	1989	1989	3	59.5	3,775	
2	0810	CONCRETE A	0	100	15	3	45.00	SF	6.50	6.50	100	1989	1989	3	59.5	174	

LAND DESCRIPTION

TOTAL OB/XF 3,949

LN	USE CODE	CLS	LAND USE DESCRIPTION	CAP	RD	LOC ZONE	FRONT	DEPTH	TOT LND UTS	UNIT TYPE	DT	DPTH FACT	% COND	TOT ADJ	UNIT PRICE	ADJ UNIT PRICE	LAND VALUE	OTHER ADJUSTMENTS AND NOTES	YEAR	DENSITY	DECL	FRZ	YR	CONSRV
1	000100	C	SFR	100	0006	RG-1	0.00	0.00	1.00	LT		1.00	1.00	1.00	115,000.00	115,000.00	115,000							

REVIEW DATE 08/11/2021 BY JH Total Acres: 0.00 Total Land Value: 115,000 Market: 0 Agricultural: 0 Common: 115,000 PRINTED 08/02/2023 BY SYS