LOT 6
LANDYNS LAKE PB 6/277

MAUCH ANDREW C & MICHELLE J
2887 LANDYNS CIRCLE
FERNANDINA BEACH, FL 32034

2023

00-00-30-035L-0006-0000

NASSAU COUNTY PROPERTY

BUILDING CHARACTERISTICS

ELEMENT	CD	CONSTRUCTION
Exterior Wall	10	ABOVE AVG 100
Roof Structur	08	IRREGULAR 100
Roof Cover	03	COMP SHNGL 100
Interior Wall	05	DRYWALL 100
Interior Floo	11	CLAY TILE 50
Interior Floo	14	CARPET 50
Air Condition	03	CENTRAL 100
Heating Type	04	AIR DUCTED 100
Bedrooms		4 100
Bathrooms		3 100
Frame	02	WOOD FRAME 100
Stories	2.	2. 100
Units		0 100
Occupancy	00	NONE 100
Quality	04	Quality Level 04
DOR CODE	0100	SINGLE FAMILY
MAP NUM		MKT AREA 01
NEIGHBORHOOD/LOC	1077.00	

AREA TYPE	TOTAL GROSS AREA	PCT OF BASE	TOT ADJ AREA	SUBAREA MARKET VALUE
BAS	1,266	100	1,266	197,952
FGR	621	55	342	53,476
FOP	104	30	31	4,847
FOP	104	30	31	4,847
FSP	170	40	68	10,632
FSP	170	40	68	10,632
FUS	1,657	100	1,657	259,090
TOTALS	4,092		3,463	541,477

MARKET ADJUSTMENTS

TYPE	MDL	EFF. AREA	TOT ADJ PTS	EFF. BASE RATE	REPL. COST NEW	AYB	EYB	ECON	FNCT		NORM	% COND
0500	01	3,463	112.5390	160.37	555,361	2016	2016	0	0	0	2.50	97.50

1 SFR CUST – 100% - 2022 Heated Area: 2923 HX Base Yr 2022

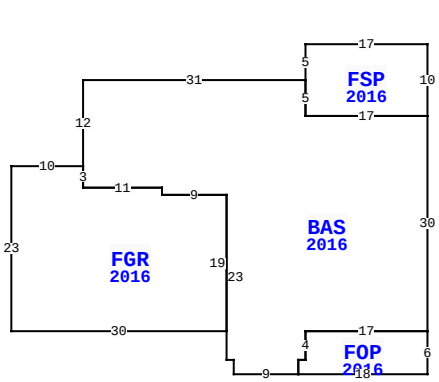

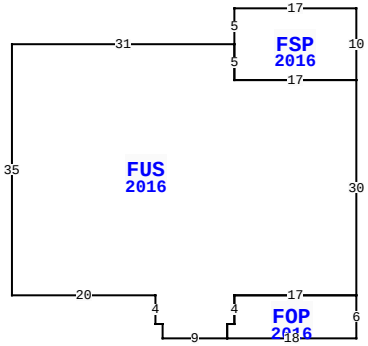

2887 LANDYNS CIR, FERNANDINA BEACH

BLD DATE		LGL DATE	
XF DATE		LAND DATE	
INC DATE		AG DATE	

VALUATION SUMMARY

VALUATION BY		STANDARD
Tax Group: 2	Tax Dist:	
BUILDING MARKET VALUE		541,477
TOTAL MARKET OB/XF VALUE		20,278
TOTAL LAND VALUE - MARKET		300,000
TOTAL MARKET VALUE		861,755
SOH/AGL Deduction		44,283
ASSESSED VALUE		817,472
TOTAL EXEMPTION VALUE	HX HB	50,000
BASE TAXABLE VALUE		767,472
TOTAL JUST VALUE		861,755
NCON VALUE		0
INCOME VALUE		
PREVIOUS YEAR MKT VALUE		793,662

PERMIT NUM	DESCRIPTION	AMT	ISSUED
20151999	NEW CONSTR	393,500	08/27/2015

SALES DATA

OFF RECORD Number	DATE	TYPE INST	Q U	V I	RSN CD	SALE PRICE
2490/1415	8/23/2021	WD	Q	I	01	820,000
GRANTOR: O'BRIEN KEVIN M & JES						
GRANTEE: MAUCH ANDREW C & MI						
1980/0215	5/14/2015	WD	Q	V	01	90,000
GRANTOR: AMELIA ISLAND HOME BU						
GRANTEE: O'BRIEN KEVIN MICHA						

BUILDING NOTES

BUILDING DIMENSIONS

FSP=[YR=2016] W17 S5 BAS=[YR=2016] W31 S12 FGR=[YR=2016] W10 S23 E30 N19 W9 N1 W11 N3$ S3 E11 S1 E9 S23 E1 S2 E9 FOP=[YR=2016] E18 N6 W17 S4 W1 S2 $ N2 E1 N4 E17 N30 W17 N5$ S5 E17 N10$ PTR=E20 FUS=[YR=2016] E31 FSP=[YR=2016] N5 E17 S10 W17 N5$ S5 E17 S30 FOP=[YR=2016] S6 W18 N2 E1 N4 E17$ W17 S4 W1 S2 W9 N2 W1 N4 W20 N35$ W20$.

EXTRA FEATURES

LN	OB/XF CODE	DESCRIPTION	BLD	CAP	L	W	UNITS	UT	Adj R	ADJ UNIT PRICE	ORIG COND	YEAR ON	YEAR ACTUAL	Q	% COND	OB/XF MKT VALUE	NOTES
1	0504	FP-ELECTRI	0	100	0	0	1.00	UT	2,000.00	2,000.00	100	2016	2016	3	98	1,960	
2	0855	CONC PAVER	0	100	0	0	800.00	SF	10.00	10.00	100	2016	2016	3	97	7,760	
3	0855	CONC PAVER	0	100	0	0	60.00	SF	10.00	10.00	100	2016	2016	3	97	582	
4	0855	CONC PAVER	0	100	0	0	96.00	SF	10.00	10.00	100	2016	2016	3	97	931	
5	0855	CONC PAVER	0	100	0	0	311.00	SF	10.00	10.00	100	2016	2016	3	97	3,017	
6	0476	VF 6 SBPL	0	100	0	0	186.00	LF	32.00	32.00	100	2016	2016	3	92	5,476	
7	0470	VNYL GATE	0	100	0	0	2.00	UT	300.00	300.00	100	2016	2016	3	92	552	

LAND DESCRIPTION

TOTAL OB/XF 20,278

LN	USE CODE	CLS	LAND USE DESCRIPTION	CAP	RD	LOC ZONE	FRONT	DEPTH	TOT LND UTS	UNIT TYPE	DT	DPTH FACT	% COND	TOT ADJ	UNIT PRICE	ADJ UNIT PRICE	LAND VALUE	OTHER ADJUSTMENTS AND NOTES	YEAR	DENSITY	DECL	FRZ	YR	CONSRV
1	000100	C	SFR	100		R-1A	0.00	0.00	1.00	LT		1.00	1.00	1.00	300,000.00	300,000.00	300,000							

REVIEW DATE 01/14/2021 BY TWA Total Acres: 0.00 Total Land Value: 300,000 Market: 0 Agricultural: 0 Common: 300,000 PRINTED 08/02/2023 BY SYS