PT LOT 7
IN OR 129/246 & OR 266/75
(EX N'LY 80FT OF E'LY 135FT)

WILDER JO ANN
1973 SYCAMORE LANE
FERNANDINA BEACH, FL 32034

2023

00-00-30-034B-0007-0050

BUILDING CHARACTERISTICS

ELEMENT	CD	CONSTRUCTION
Exterior Wall	05	AVERAGE 60
Exterior Wall	16	WD FR STUC 40
Roof Structur	03	GABLE/HIP 100
Roof Cover	03	COMP SHNGL 100
Interior Wall	05	DRYWALL 100
Interior Floo	09	PINE WOOD 50
Interior Floo	12	HARDWOOD 50
Air Condition	02	WINDOW 100
Heating Type	02	CONVECTION 100
Bedrooms		2 100
Bathrooms		2 100
Frame	02	WOOD FRAME 100
Stories	1.	1. 100
Units		0 100
BUD8 Adjustme	05	DIST 1A 100
Occupancy	00	NONE 100
Quality	02	Quality Level 02
DOR CODE	0100	SINGLE FAMILY
MAP NUM		MKT AREA 02
NEIGHBORHOOD/LOC	2020.00	

AREA TYPE	TOTAL GROSS AREA	PCT OF BASE	TOT ADJ AREA	SUBAREA MARKET VALUE
BAS	2,155	100	2,155	119,215
FOP	237	30	71	3,928
UDG	330	55	182	10,068
UDG	330	55	182	10,068
UST	200	45	90	4,979
TOTALS	3,252		2,680	148,258

MARKET ADJUSTMENTS

TYPE	MDL	EFF. AREA	TOT ADJ PTS	EFF. BASE RATE	REPL. COST NEW	AYB	EYB	ECON	FNCT		NORM	% COND
0100	01	2,680	88.6464	80.00	214,400	1900	1950	0	0	0	30.85	69.15

1 SINGLE FAM – 100% - 1973 Heated Area: 2155 HX Base Yr 1973

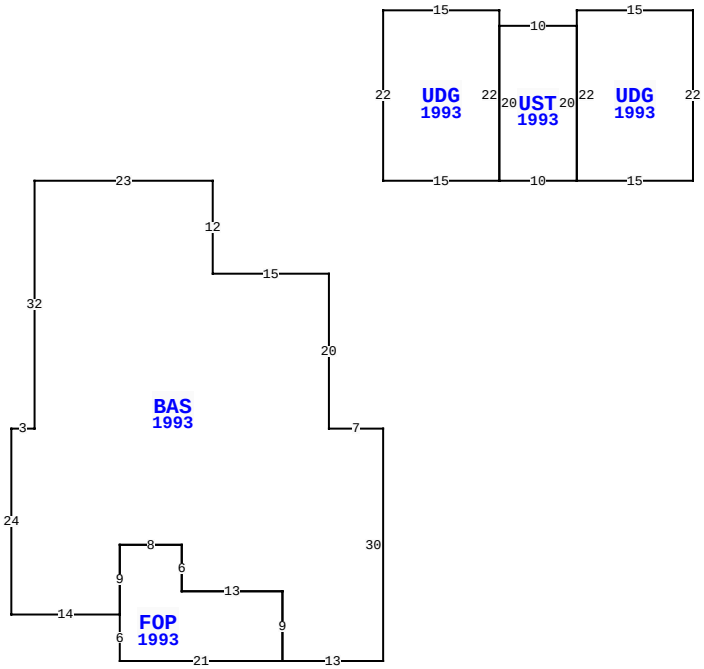

1973 SYCAMORE LN, FERNANDINA BEACH

BLD DATE		LGL DATE	
XF DATE		LAND DATE	
INC DATE		AG DATE	

NASSAU COUNTY PROPERTY

PAGE 1 of 1 8

VALUATION SUMMARY

VALUATION BY		STANDARD
Tax Group: 8	Tax Dist:	
BUILDING MARKET VALUE		148,258
TOTAL MARKET OB/XF VALUE		3,320
TOTAL LAND VALUE - MARKET		125,400
TOTAL MARKET VALUE		276,978
SOH/AGL Deduction		194,311
ASSESSED VALUE		82,667
TOTAL EXEMPTION VALUE	HX HB WX	55,000
BASE TAXABLE VALUE		27,667
TOTAL JUST VALUE		276,978
NCON VALUE		0
INCOME VALUE		
PREVIOUS YEAR MKT VALUE		250,554

PERMIT NUM	DESCRIPTION	AMT	ISSUED
3319	GARAGE	0	04/01/1986

SALES DATA

OFF RECORD Number	DATE	TYPE INST	Q U	V I	RSN CD	SALE PRICE
0266/0075	5/01/1978	WD	U	I		100
GRANTOR:						
GRANTEE:						
0129/0245	1/01/1972	TA	Q	I		15,000
GRANTOR:						
GRANTEE:						

BUILDING NOTES

BUILDING DIMENSIONS

BAS=[YR=1993] N30 W7 N20 W15 N12 W23 S32 W3 S24 E14
FOP=[YR=1993] S6 E21 N9 W13 N6 W8 S9$N9 E8 S6 E13 S9 E13$
PTR=N62 UDG=[YR=1993] E15 UST=[YR=1993] E10 UDG=[YR=1993] E15
N22 W15 S22$N20 W10 S20$N22 W15 S22$ S62$.

EXTRA FEATURES

LN	OB/XF CODE	DESCRIPTION	BLD	CAP	L	W	UNITS	UT	Adj R	ADJ UNIT PRICE	ORIG COND	YEAR ON	YEAR ACTUAL	Q	% COND	OB/XF MKT VALUE	NOTES
1	0810	CONCRETE A	0	100	0	0	1,800.00	SF	6.50	6.50	100	1955	1955	3	20	2,340	
3	0504	FP-ELECTRI	0	100	0	0	1.00	UT	2,000.00	2,000.00	100	1980	1980	3	49	980	

LAND DESCRIPTION

TOTAL OB/XF 3,320

LN	USE CODE	CLS	LAND USE DESCRIPTION	CAP	RD	LOC ZONE	FRONT	DEPTH	TOT LND UTS	UNIT TYPE	DT	DPTH FACT	% COND	TOT ADJ	UNIT PRICE	ADJ UNIT PRICE	LAND VALUE	OTHER ADJUSTMENTS AND NOTES	YEAR	DENSITY	DECL	FRZ	YR	CONSRV
1	000115	C	SFR ACRES	100		OR	0.00	0.00	1.32	AC		1.00	1.00	1.00	95,000.00	95,000.00	125,400							

REVIEW DATE 01/24/2018 BY DJX Total Acres: 1.32 Total Land Value: 125,400 Market: 0 Agricultural: 0 Common: 125,400 PRINTED 08/02/2023 BY SYS