LOT 3
IN OR 1790/1777
JACOBSON SUB PB 5/238

PETRO LIVING TRUST/PETRO PETER F TRUSTEE
95047 SEAWALK CT
FERNANDINA BEACH, FL 32034

2023

00-00-30-032A-0003-0000

NASSAU COUNTY PROPERTY

BUILDING CHARACTERISTICS

ELEMENT	CD	CONSTRUCTION
Exterior Wall	12	CEDAR 100
Roof Structur	03	GABLE/HIP 100
Roof Cover	03	COMP SHNGL 100
Interior Wall	05	DRYWALL 100
Interior Floo	13	LVT/LAMNT 50
Interior Floo	14	CARPET 50
Air Condition	03	CENTRAL 100
Heating Type	04	AIR DUCTED 100
Bedrooms		3 100
Bathrooms		2.5 100
Frame	02	WOOD FRAME 100
Stories	1.	1. 100
Units		0 100
BUD8 Adjustme	05	DIST 1A 100
Occupancy	00	NONE 100
Quality	03	Quality Level 03
DOR CODE	0100	SINGLE FAMILY
MAP NUM		MKT AREA 03
NEIGHBORHOOD/LOC	3031.00	

AREA TYPE	TOTAL GROSS AREA	PCT OF BASE	TOT ADJ AREA	SUBAREA MARKET VALUE
BAS	2,137	100	2,137	171,084
BAS	324	100	324	25,939
FGR	575	55	316	25,299
FOP	36	30	11	880
PTO	96	5	5	400
STP	18	10	2	160
TOTALS	3,186		2,795	223,762

MARKET ADJUSTMENTS

TYPE	MDL	EFF. AREA	TOT ADJ PTS	EFF. BASE RATE	REPL. COST NEW	AYB	EYB	ECON	FNCT		NORM	% COND
0100	01	2,795	107.5200	97.04	271,227	1987	1987	0	0	0	17.50	82.50

1 SINGLE FAM – 0% - 0 Heated Area: 2461 HX Base Yr

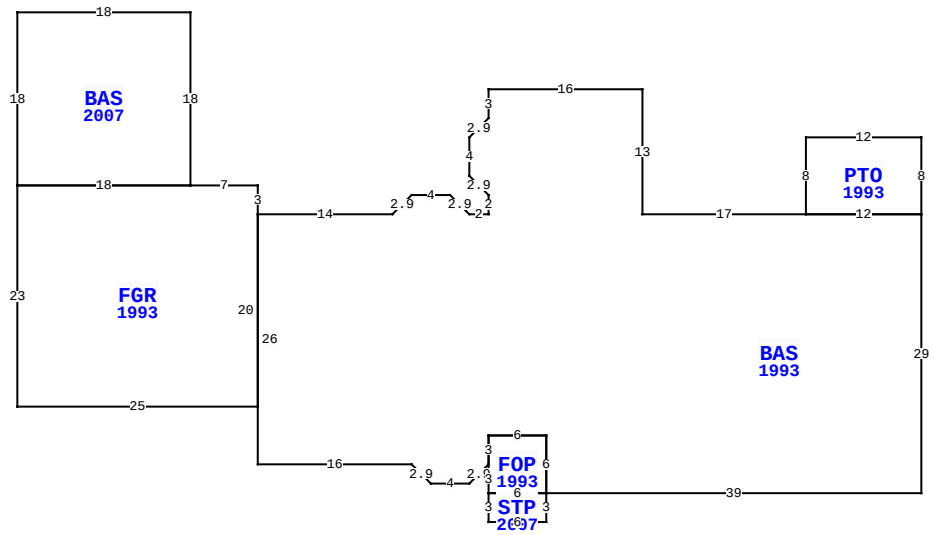

1509 SCOTT RD, FERNANDINA BEACH

BLD DATE		LGL DATE	
XF DATE		LAND DATE	
INC DATE		AG DATE	

VALUATION SUMMARY

VALUATION BY	STANDARD
Tax Group: 8	Tax Dist:
BUILDING MARKET VALUE	223,762
TOTAL MARKET OB/XF VALUE	20,305
TOTAL LAND VALUE - MARKET	312,500
TOTAL MARKET VALUE	556,567
SOH/AGL Deduction	115,503
ASSESSED VALUE	441,064
TOTAL EXEMPTION VALUE	0
BASE TAXABLE VALUE	441,064
TOTAL JUST VALUE	556,567
NCON VALUE	0
INCOME VALUE	
PREVIOUS YEAR MKT VALUE	491,556

PERMIT NUM	DESCRIPTION	AMT	ISSUED
B21518	REMODEL	2,100	06/01/2008

SALES DATA

OFF RECORD Number	DATE	TYPE INST	Q / U	V / I	RSN CD	SALE PRICE
1790/1777	4/13/2012	WD	U	I	30	100
GRANTOR: PETRO PETER F & BARBA						
GRANTEE: PETRO PETER F & BAR						
1773/0787	1/06/2012	TD	U	I	30	100
GRANTOR: PETRO PETER F & BARBA						
GRANTEE: PETRO PETER F & BAR						

BUILDING NOTES

BUILDING DIMENSIONS

PTO=[YR=1993] W12 S8 BAS=[YR=1993] W17 N13 W16 S3 L2 D2 S4 R2 D2 S2 W2 L2 U2 W4 L2 D2 W14 FGR=[YR=1993] N3 W7 BAS=[YR=2007] N18 W18 S18 E18$ W18 S23 E25 N20$ S26 E16 R2 D2 E4 U2 R2 FOP=[YR=1993] S3 STP=[YR=2007] S3 E6 N3 W6 $ E6 N6 W6 S3$ N3 E6 S6 E39 N29 W12$ E12 N8$.

EXTRA FEATURES

L N	OB/XF CODE	DESCRIPTION	BLD	CAP	L	W	UNITS	UT	Adj R	ADJ UNIT PRICE	ORIG COND	YEAR ON	YEAR ACTUAL	Q	% COND	OB/XF MKT VALUE	NOTES
1	0861	POOL GUNIT	0	0	30	15	450.00	SF	85.00	85.00	100	1991	1991	3	20	7,650	
2	0812	CONCRETE C	0	0	0	0	1,753.00	SF	4.00	4.00	100	1988	1988	3	57	3,997	
3	0845	KOOL DECK	0	0	0	0	929.00	SF	7.25	7.25	100	1991	1991	3	64	4,311	
4	0504	FP-ELECTRI	0	0	0	0	1.00	UT	2,000.00	2,000.00	100	1997	1997	3	81	1,620	
5	0830	FLAGSTONE	0	0	0	0	303.00	SF	12.00	12.00	100	1997	1997	3	75	2,727	

LAND DESCRIPTION

TOTAL OB/XF 20,305

L N	USE CODE	CLS	LAND USE DESCRIPTION	CAP	R D	LOC ZONE	FRONT	DEPTH	TOT LND UTS	UNIT TYPE	D T	DPTH FACT	% COND	TOT ADJ	UNIT PRICE	ADJ UNIT PRICE	LAND VALUE	OTHER ADJUSTMENTS AND NOTES	YEAR	DENSITY	DECL	FRZ	YR	CONSRV
1	000100	C	SFR	0		RS-1	0.00	0.00	1.00	LT		1.00	1.00	1.25	250,000.00	312,500.00	312,500							

REVIEW DATE 07/24/2019 BY DJA Total Acres: 0.00 Total Land Value: 312,500 Market: 0 Agricultural: 0 Common: 312,500 PRINTED 08/02/2023 BY SYS