LOT 29
HARRISON COVE PB 6/197

TORRES LUKE A & GABRIELLE W
95342 MACKINAS CIRCLE
FERNANDINA BEACH, FL 32034

2023

00-00-30-0283-0029-0000

NASSAU COUNTY PROPERTY

BUILDING CHARACTERISTICS

ELEMENT	CD	CONSTRUCTION
Exterior Wall	10	ABOVE AVG 100
Roof Structur	08	IRREGULAR 100
Roof Cover	03	COMP SHNGL 100
Interior Wall	05	DRYWALL 100
Interior Floo	11	CLAY TILE 50
Interior Floo	14	CARPET 50
Air Condition	03	CENTRAL 100
Heating Type	04	AIR DUCTED 100
Bedrooms		3 100
Bathrooms		2.5 100
Frame	02	WOOD FRAME 100
Stories	2.	2. 100
Units		0 100
Occupancy	00	NONE 100
Quality	04	Quality Level 04

DOR CODE	0100	SINGLE FAMILY	
MAP NUM		MKT AREA	03
NEIGHBORHOOD/LOC	3034.00		

AREA TYPE	TOTAL GROSS AREA	PCT OF BASE	TOT ADJ AREA	SUBAREA MARKET VALUE
BAS	1,930	100	1,930	282,176
FGR	441	55	243	35,528
FOP	89	30	27	3,947
FUS	692	100	692	101,174
PTO	155	5	8	1,170
UOP	52	20	10	1,463
TOTALS	3,359		2,910	425,457

MARKET ADJUSTMENTS

TYPE	MDL	EFF. AREA	TOT ADJ PTS	EFF. BASE RATE	REPL. COST NEW	AYB	EYB	ECON	FNCT		NORM	% COND
0500	01	2,910	113.9985	162.45	472,730	2001	2001	0	0	0	10.00	90.00

1 SFR CUST – 0% - 0 Heated Area: 2622 HX Base Yr

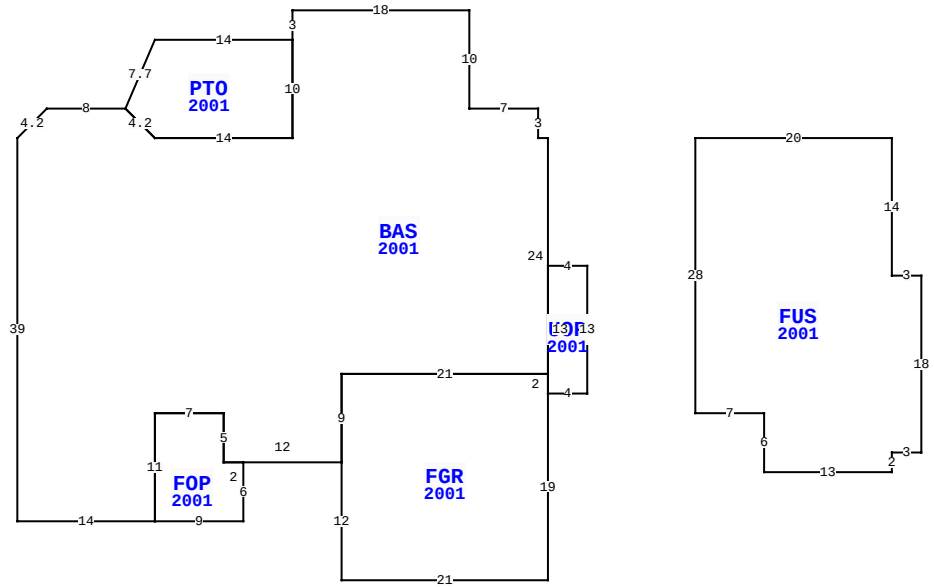

95342 MACKINAS CIR, FERNANDINA BEACH

BLD DATE		LGL DATE	
XF DATE		LAND DATE	
INC DATE		AG DATE	

VALUATION SUMMARY

VALUATION BY	STANDARD
Tax Group: 8	Tax Dist:
BUILDING MARKET VALUE	425,457
TOTAL MARKET OB/XF VALUE	12,560
TOTAL LAND VALUE - MARKET	350,000
TOTAL MARKET VALUE	788,017
SOH/AGL Deduction	125,050
ASSESSED VALUE	662,967
TOTAL EXEMPTION VALUE	0
BASE TAXABLE VALUE	662,967
TOTAL JUST VALUE	788,017
NCON VALUE	0
INCOME VALUE	
PREVIOUS YEAR MKT VALUE	602,697

PERMIT NUM	DESCRIPTION	AMT	ISSUED
B1429533	DRIVEWAY	1,500	11/01/2014
B0007573	NEW CONSTR	215,000	10/01/2000

SALES DATA

OFF RECORD Number	DATE	TYPE INST	Q / U	V / I	RSN CD	SALE PRICE
2461/1957	5/14/2021	WD	Q	I	01	650,000
GRANTOR: SPERANZA ANGELO M & K						
GRANTEE: TORRES LUKE A & GAB						
1517/0324	8/06/2007	QC	U	I	06	287,500
GRANTOR: SPERANZA JACKIE V & A						
GRANTEE: SPERANZA ANGELO M						

BUILDING NOTES

BUILDING DIMENSIONS

BAS=[YR=2001] W1 N3 W7 N10 W18 S3 PTO=[YR=2001] W14 L3 D7 D3 R3 E14 N10 $ S10 W14 U3 L3 W8 D3 L3 S39 E14FOP=[YR=2001] E9 N6 W2 N5 W7 S11 $ N11 E7 S5 E12 FGR=[YR=2001] S12 E21N19 UOP=[YR=2001] E4 N13 W4 S13 $ N2 W21 S9 $ N9 E21 N24 $ PTR= E15 FUS=[YR=2001] E20 S14 E3 S18 W3S2 W13 N6 W7 N28 $ W15 $.

EXTRA FEATURES

LN	OB/XF CODE	DESCRIPTION	BLD	CAP	L	W	UNITS	UT	Adj R	ADJ UNIT PRICE	ORIG COND	YEAR ON	YEAR ACTUAL	Q	% COND	OB/XF MKT VALUE	NOTES
1	0500	FP-PRE FAB	0	0	0	0	1.00	UT	3,500.00	3,500.00	100	2001	2001	3	86	3,010	
2	0811	CONCRETE B	0	0	0	0	926.00	SF	5.20	5.20	100	2001	2001	3	82	3,948	
3	0810	CONCRETE A	0	0	0	0	120.00	SF	6.50	6.50	100	2014	2014	3	95	741	
4	0811	CONCRETE B	0	0	0	0	984.00	SF	5.20	5.20	100	2014	2014	3	95	4,861	

LAND DESCRIPTION

TOTAL OB/XF 12,560

LN	USE CODE	CLS	LAND USE DESCRIPTION	CAP	RD	LOC ZONE	FRONT	DEPTH	TOT LND UTS	UNIT TYPE	DT	DPTH FACT	% COND	TOT ADJ	UNIT PRICE	ADJ UNIT PRICE	LAND VALUE	OTHER ADJUSTMENTS AND NOTES	YEAR	DENSITY	DECL	FRZ	YR	CONSRV
1	000100	C	SFR	0			0.00	0.00	1.00	LT		1.00	1.00	1.00	350,000.00	350,000.00	350,000							

REVIEW DATE 01/17/2018 BY DJX Total Acres: 0.00 Total Land Value: 350,000 Market: 0 Agricultural: 0 Common: 350,000 PRINTED 08/02/2023 BY SYS