LOT 6
IN OR 1289/1825
HARRISON COVE PB 6/197

WILLYOUNG LILLIAN
95285 MACKINAS CIRCLE
FERNANDINA BEACH, FL 32034

2023

00-00-30-0283-0006-0000

NASSAU COUNTY PROPERTY

BUILDING CHARACTERISTICS

ELEMENT	CD	CONSTRUCTION
Exterior Wall	16	WD FR STUC 100
Roof Structur	03	GABLE/HIP 100
Roof Cover	03	COMP SHNGL 100
Interior Wall	05	DRYWALL 100
Interior Floo	11	CLAY TILE 60
Interior Floo	14	CARPET 40
Air Condition	03	CENTRAL 100
Heating Type	04	AIR DUCTED 100
Bedrooms		4 100
Bathrooms		3.5 100
Frame	02	WOOD FRAME 100
Stories	2.	2. 100
Units		0 100
Occupancy	00	NONE 100
Quality	04	Quality Level 04

DOR CODE	0100	SINGLE FAMILY	
MAP NUM		MKT AREA	03
NEIGHBORHOOD/LOC	3034.00		

AREA TYPE	TOTAL GROSS AREA	PCT OF BASE	TOT ADJ AREA	SUBAREA MARKET VALUE
BAS	1,851	100	1,851	269,332
FGR	599	55	329	47,872
FOP	149	30	45	6,548
FSP	237	40	95	13,823
FUS	1,021	100	1,021	148,561
TOTALS	3,857		3,341	486,135

MARKET ADJUSTMENTS

TYPE	MDL	EFF. AREA	TOT ADJ PTS	EFF. BASE RATE	REPL. COST NEW	AYB	EYB	ECON	FNCT		NORM	% COND
0500	01	3,341	112.8288	160.78	537,166	2003	2003	0	0	0	9.50	90.50

1 SFR CUST – 100% - 2006 Heated Area: 2872 HX Base Yr 2006

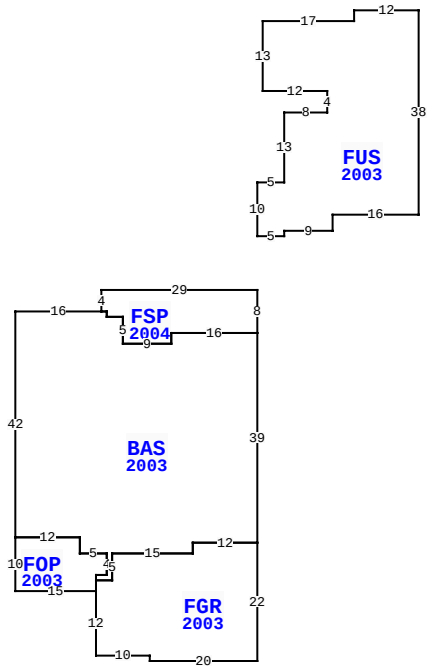

95285 MACKINAS CIR, FERNANDINA BEACH

BLD DATE		LGL DATE	
XF DATE		LAND DATE	
INC DATE		AG DATE	

VALUATION SUMMARY

VALUATION BY		STANDARD
Tax Group: 8	Tax Dist:	
BUILDING MARKET VALUE		486,135
TOTAL MARKET OB/XF VALUE		6,444
TOTAL LAND VALUE - MARKET		350,000
TOTAL MARKET VALUE		842,579
SOH/AGL Deduction		443,865
ASSESSED VALUE		398,714
TOTAL EXEMPTION VALUE	HX HB WX	55,000
BASE TAXABLE VALUE		343,714
TOTAL JUST VALUE		842,579
NCON VALUE		0
INCOME VALUE		
PREVIOUS YEAR MKT VALUE		656,152

PERMIT NUM	DESCRIPTION	AMT	ISSUED
R035111	REPAIR/RRF	3,200	05/01/2003
B0311057	FOUNDATION	5,500	04/01/2003

SALES DATA

OFF RECORD Number	DATE	TYPE INST	Q U	V I	RSN CD	SALE PRICE
1289/1825	1/24/2005	WD	Q	I		462,000
GRANTOR: PIERMARINI DENNIS A						
GRANTEE: WILLYOUNG LILLIAN						
1200/0805	1/08/2004	WD	U	I	21	411,500
GRANTOR: COPPENBARGER HOMES IN						
GRANTEE: PIERMARINI DENNIS A						

BUILDING NOTES

BUILDING DIMENSIONS

FSP=[YR=2004] W29 S4 BAS=[YR=2003] W16 S42 FOP=[YR=2003] S10 E15 FGR=[YR=2003] S12 E10 S1 E20 N22 W12 S2 W15 S5 W3 S2$ N3 E2 N4 W5 N3 W12$ E12 S3 E5 S4 W2 S1 E3 N5 E15 N2 E12 N39 W16 S2 W9 N5 W3 N1 W1$ E1 S1 E3 S5 E9 N2 E16 N8$ PTR= N10 FUS=[YR=2003] N10 E5 N13 E8 N4 W12 N13 E17 N2 E12 S38 W16 S3 W9 S1 W5$ S10$.

EXTRA FEATURES

LN	OB/XF CODE	DESCRIPTION	BLD	CAP	L	W	UNITS	UT	Adj R	ADJ UNIT PRICE	ORIG COND	YEAR ON	YEAR ACTUAL	Q	% COND	OB/XF MKT VALUE	NOTES
1	0500	FP-PRE FAB	0	100	0	0	1.00	UT	3,500.00	3,500.00	100	2003	2003	3	88	3,080	
2	0811	CONCRETE B	0	100	0	0	574.00	SF	5.20	5.20	100	2003	2003	3	84	2,507	
3	0855	CONC PAVER	0	100	34	3	102.00	SF	10.00	10.00	100	2003	2003	3	84	857	

LAND DESCRIPTION

TOTAL OB/XF 6,444

LN	USE CODE	CLS	LAND USE DESCRIPTION	CAP	RD	LOC ZONE	FRONT	DEPTH	TOT LND UTS	UNIT TYPE	DT	DPTH FACT	% COND	TOT ADJ	UNIT PRICE	ADJ UNIT PRICE	LAND VALUE	OTHER ADJUSTMENTS AND NOTES	YEAR	DENSITY	DECL	FRZ	YR	CONSRV
1	000100	C	SFR	100			0.00	0.00	1.00	LT		1.00	1.00	1.00	350,000.00	350,000.00	350,000							

REVIEW DATE 02/27/2017 BY DJ Total Acres: 0.00 Total Land Value: 350,000 Market: 0 Agricultural: 0 Common: 350,000 PRINTED 08/02/2023 BY SYS