BLOCK 2 LOT 9
IN OR 457 PG 462
GROVE PARK REPLAT PB 4/81

LEE JUDY W
670 GROVE PARK CIRCLE
FERNANDINA BEACH, FL 32034

2023

00-00-30-0270-0002-0090

NASSAU COUNTY PROPERTY

BUILDING CHARACTERISTICS

ELEMENT	CD	CONSTRUCTION
Exterior Wall	19	COMMON BRK 100
Roof Structur	02	SHED 100
Roof Cover	03	COMP SHNGL 100
Interior Wall	05	DRYWALL 100
Interior Floo	14	CARPET 90
Interior Floo	07	CORK/VTILE 10
Air Condition	03	CENTRAL 100
Heating Type	04	AIR DUCTED 100
Bedrooms		4 100
Bathrooms		2 100
Frame	02	WOOD FRAME 100
Stories	1.	1. 100
Units		0 100
BUD8 Adjustme	05	DIST 1A 100
Quality	02	Quality Level 02
DOR CODE	0100	SINGLE FAMILY
MAP NUM		MKT AREA 02
NEIGHBORHOOD/LOC	2029.00	

AREA TYPE	TOTAL GROSS AREA	PCT OF BASE	TOT ADJ AREA	SUBAREA MARKET VALUE
BAS	1,758	100	1,758	219,505
FGR	480	55	264	32,963
FOP	28	30	8	999
FSP	192	40	77	9,615
TOTALS	2,458		2,107	263,081

MARKET ADJUSTMENTS

TYPE	MDL	EFF. AREA	TOT ADJ PTS	EFF. BASE RATE	REPL. COST NEW	AYB	EYB	ECON	FNCT		NORM	% COND
0900	11	2,107	147.0588	174.63	367,945	1981	1985	0	0	0	28.50	71.50

1 SNGL FAM – 100% - 1986 Heated Area: 1758 HX Base Yr 1986

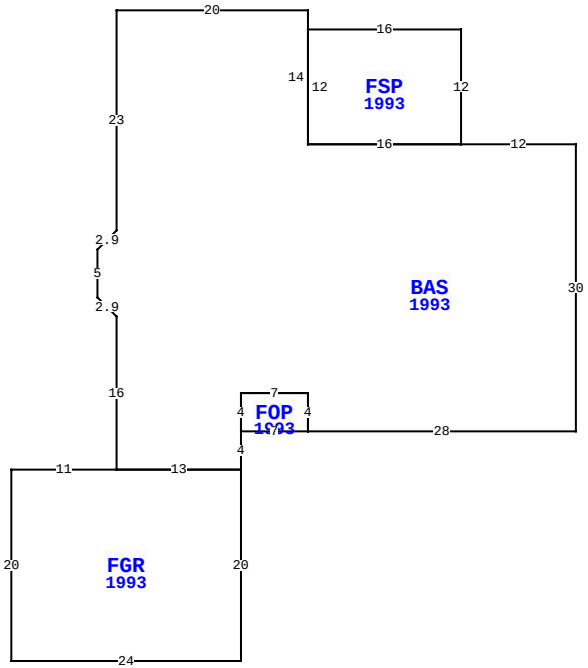

670 GROVE PARK CIR, FERNANDINA BEACH

BLD DATE		LGL DATE	
XF DATE		LAND DATE	
INC DATE		AG DATE	

VALUATION SUMMARY

VALUATION BY		STANDARD
Tax Group: 8	Tax Dist:	
BUILDING MARKET VALUE		263,081
TOTAL MARKET OB/XF VALUE		3,989
TOTAL LAND VALUE - MARKET		100,000
TOTAL MARKET VALUE		367,070
SOH/AGL Deduction		229,501
ASSESSED VALUE		137,569
TOTAL EXEMPTION VALUE	HX HB	50,000
BASE TAXABLE VALUE		87,569
TOTAL JUST VALUE		367,070
NCON VALUE		0
INCOME VALUE		
PREVIOUS YEAR MKT VALUE		266,091

PERMIT NUM	DESCRIPTION	AMT	ISSUED

SALES DATA

OFF RECORD Number	DATE	TYPE INST	Q / U	V / I	RSN CD	SALE PRICE
0457/0462	6/01/1985	WD	Q	I		79,000
GRANTOR:						
GRANTEE:						
0370/0239	10/01/1982	WD	Q	I		81,000
GRANTOR:						
GRANTEE:						

BUILDING NOTES

BUILDING DIMENSIONS

BAS=[YR=1993] W12 FSP=[YR=1993] N12 W16 S12 E16$ W16 N14 W20 S23 D2 L2 S5 D2 R2 S16 FGR=[YR=1993] W11 S20 E24 N20 W13$ E13 N4 FOP=[YR=1993] E7 N4 W7 S4$ N4 E7 S4 E28 N30 $.

EXTRA FEATURES

LN	OB/XF CODE	DESCRIPTION	BLD	CAP	L	W	UNITS	UT	Adj R	ADJ UNIT PRICE	ORIG COND	YEAR ON	YEAR ACTUAL	Q	% COND	OB/XF MKT VALUE	NOTES
1	0500	FP-PRE FAB	0	100	0	0	1.00	UT	3,500.00	3,500.00	100	1981	1981	3	51.5	1,803	
2	0812	CONCRETE C	0	100	0	0	1,438.00	SF	4.00	4.00	100	1981	1981	3	38	2,186	

LAND DESCRIPTION

TOTAL OB/XF 3,989

LN	USE CODE	CLS	LAND USE DESCRIPTION	CAP	RD	LOC ZONE	FRONT	DEPTH	TOT LND UTS	UNIT TYPE	DT	DPTH FACT	% COND	TOT ADJ	UNIT PRICE	ADJ UNIT PRICE	LAND VALUE	OTHER ADJUSTMENTS AND NOTES	YEAR	DENSITY	DECL	FRZ	YR	CONSRV
1	000100	C	SFR	100		RS-2	0.00	0.00	1.00	LT		1.00	1.00	1.00	100,000.00	100,000.00	100,000							

REVIEW DATE 01/16/2019 BY DJA Total Acres: 0.00 Total Land Value: 100,000 Market: 0 Agricultural: 0 Common: 100,000 PRINTED 08/02/2023 BY SYS