BLOCK 1 LOT 2
IN OR 2139/3
GROVE PARK SUB PB 4/52 & 53

CASTIAUX JOSEPH & SANDRA
785 GROVE PARK CIR
FERNANDINA BEACH, FL 32034

2023

00-00-30-0270-0001-0020

BUILDING CHARACTERISTICS

ELEMENT	CD	CONSTRUCTION
Exterior Wall	10	ABOVE AVG 100
Roof Structur	03	GABLE/HIP 100
Roof Cover	03	COMP SHNGL 100
Interior Wall	05	DRYWALL 100
Interior Floo	11	CLAY TILE 50
Interior Floo	14	CARPET 50
Air Condition	03	CENTRAL 100
Heating Type	04	AIR DUCTED 100
Bedrooms		3 100
Bathrooms		2 100
Frame	02	WOOD FRAME 100
Stories	0	0 100
Units		0 100
Quality	02	Quality Level 02

DOR CODE 0100 SINGLE FAMILY
MAP NUM | MKT AREA 02
NEIGHBORHOOD/LOC 2029.00

AREA TYPE	TOTAL GROSS AREA	PCT OF BASE	TOT ADJ AREA	SUBAREA MARKET VALUE
BAS	1,607	100	1,607	260,371
DCK	342	10	34	5,509
FGR	488	55	268	43,422
FOP	39	30	12	1,944
TOTALS	2,476		1,921	311,247

MARKET ADJUSTMENTS

TYPE	MDL	EFF. AREA	TOT ADJ PTS	EFF. BASE RATE	REPL. COST NEW	AYB	EYB	ECON	FNCT		NORM	% COND
0900	11	1,921	139.2237	165.33	317,599	2017	2017	0	0	0	2.00	98.00

1 SNGL FAM – 100% - 2018 Heated Area: 1607 HX Base Yr 2018

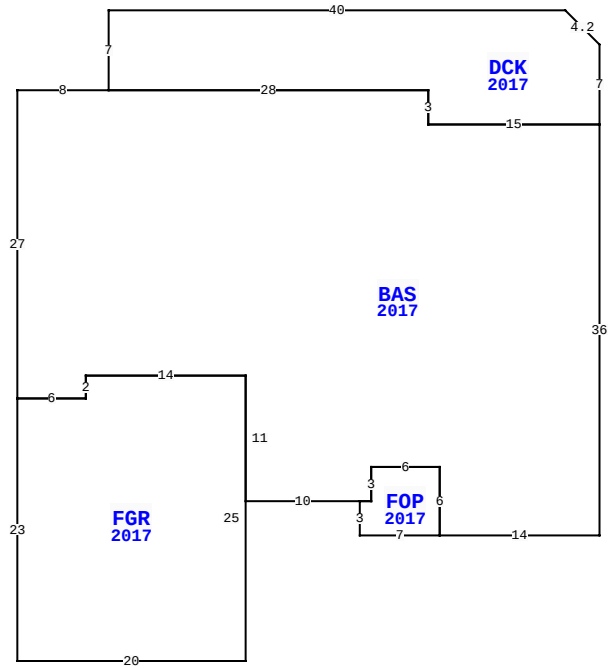

785 GROVE PARK CIR, FERNANDINA BEACH

BLD DATE		LGL DATE	
XF DATE		LAND DATE	
INC DATE		AG DATE	

NASSAU COUNTY PROPERTY

PAGE 1 of 1 8

VALUATION SUMMARY

VALUATION BY		STANDARD
Tax Group: 8	Tax Dist:	
BUILDING MARKET VALUE		311,247
TOTAL MARKET OB/XF VALUE		4,072
TOTAL LAND VALUE - MARKET		100,000
TOTAL MARKET VALUE		415,319
SOH/AGL Deduction		190,483
ASSESSED VALUE		224,836
TOTAL EXEMPTION VALUE	HX HB	50,000
BASE TAXABLE VALUE		174,836
TOTAL JUST VALUE		415,319
NCON VALUE		0
INCOME VALUE		
PREVIOUS YEAR MKT VALUE		364,536

PERMIT NUM	DESCRIPTION	AMT	ISSUED
1701262	CO ISSUED	0	02/17/2017
B1632960	NEW CONSTR	202,842	08/01/2016

SALES DATA

OFF RECORD Number	DATE	TYPE INST	Q / U	V / I	RSN CD	SALE PRICE
2139/0003	6/15/2017	WD	U	I	11	100
GRANTOR: CARROLL JUSTIN MICHAE						
GRANTEE: CASTIAUX JOSEPH & S						
2127/0437	6/15/2017	WD	Q	I	02	272,000
GRANTOR: CARROLL JUSTIN MICHAE						
GRANTEE: CASTIAUX JOSEPH & S						

BUILDING NOTES

BUILDING DIMENSIONS

DCK=[YR=2017] U3 L3 W40 S7 BAS=[YR=2017] W8 S27
FGR=[YR=2017] S23 E20 N25 W14 S2 W6$ E6 N2 E14 S11 E10
FOP=[YR=2017] S3 E7 N6 W6 S3 W1$ E1 N3 E6 S6 E14 N36 W15 N3
W28$ E28 S3 E15 N7$.

EXTRA FEATURES

LN	OB/XF CODE	DESCRIPTION	BLD	CAP	L	W	UNITS	UT	Adj R	ADJ UNIT PRICE	ORIG COND	YEAR ON	YEAR ACTUAL	Q	% COND	OB/XF MKT VALUE	NOTES
1	0811	CONCRETE B	0	100	0	0	721.00	SF	5.20	5.20	100	2017	2017	3	97	3,637	
2	0810	CONCRETE A	0	100	0	0	69.00	SF	6.50	6.50	100	2017	2017	3	97	435	

LAND DESCRIPTION

TOTAL OB/XF 4,072

LN	USE CODE	CLS	LAND USE DESCRIPTION	CAP	RD	LOC ZONE	FRONT	DEPTH	TOT LND UTS	UNIT TYPE	DT	DPTH FACT	% COND	TOT ADJ	UNIT PRICE	ADJ UNIT PRICE	LAND VALUE	OTHER ADJUSTMENTS AND NOTES	YEAR	DENSITY	DECL	FRZ	YR	CONSRV
1	000100	C	SFR	100		RS-2	0.00	0.00	1.00	LT		1.00	1.00	1.00	100,000.00	100,000.00	100,000							

REVIEW DATE 03/21/2017 BY DJ Total Acres: 0.00 Total Land Value: 100,000 Market: 0 Agricultural: 0 Common: 100,000 PRINTED 08/02/2023 BY SYS