LOT 1
FOREST PINES SUB PB 6/8

DARRAH MONA/LANGE ERIC
1459 FOUNTAIN DRIVE
FERNANDINA BEACH, FL 32034

2023

00-00-30-0254-0001-0000

NASSAU COUNTY PROPERTY

BUILDING CHARACTERISTICS

ELEMENT	CD	CONSTRUCTION
Exterior Wall	16	WD FR STUC 100
Roof Structur	03	GABLE/HIP 100
Roof Cover	03	COMP SHNGL 100
Interior Wall	05	DRYWALL 100
Interior Floo	11	CLAY TILE 50
Interior Floo	14	CARPET 50
Air Condition	03	CENTRAL 100
Heating Type	04	AIR DUCTED 100
Bedrooms		3 100
Bathrooms		2 100
Frame	02	WOOD FRAME 100
Stories	1.	1. 100
Units		0 100
Occupancy	00	NONE 100
Quality	06	Quality Level 06
DOR CODE	0100	SINGLE FAMILY
MAP NUM		MKT AREA 02
NEIGHBORHOOD/LOC	2028.00	

AREA TYPE	TOTAL GROSS AREA	PCT OF BASE	TOT ADJ AREA	SUBAREA MARKET VALUE
BAS	2,079	100	2,079	335,960
FGR	548	55	301	48,641
FOP	32	30	10	1,616
FOP	36	30	11	1,777
FOP	39	30	12	1,939
FOP	337	30	101	16,322
UOP	283	20	57	9,211
TOTALS	3,354		2,571	415,466

MARKET ADJUSTMENTS

TYPE	MDL	EFF. AREA	TOT ADJ PTS	EFF. BASE RATE	REPL. COST NEW	AYB	EYB	ECON	FNCT		NORM	% COND
0500	01	2,571	125.3040	178.56	459,078	2003	2003	0	0	0	9.50	90.50

1 SFR CUST – 100% - 0 Heated Area: 2079 HX Base Yr

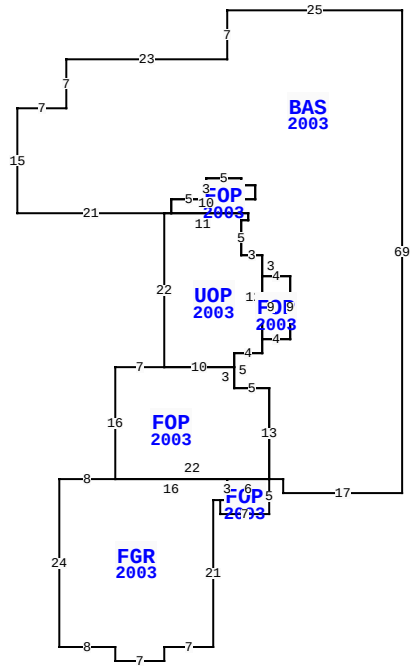

1459 FOUNTAIN DR, FERNANDINA BEACH

BLD DATE		LGL DATE	
XF DATE		LAND DATE	
INC DATE		AG DATE	

VALUATION SUMMARY

VALUATION BY		STANDARD
Tax Group: 8	Tax Dist:	
BUILDING MARKET VALUE		415,466
TOTAL MARKET OB/XF VALUE		41,488
TOTAL LAND VALUE - MARKET		120,000
TOTAL MARKET VALUE		576,954
SOH/AGL Deduction		322,548
ASSESSED VALUE		254,406
TOTAL EXEMPTION VALUE	HX HB DX SX	105,000
BASE TAXABLE VALUE		149,406
TOTAL JUST VALUE		576,954
NCON VALUE		0
INCOME VALUE		
PREVIOUS YEAR MKT VALUE		399,246

PERMIT NUM	DESCRIPTION	AMT	ISSUED
B1909441	GARAGE	21,000	09/06/2019
B1225912	METAL CARPORT	14,908	04/01/2012

SALES DATA

OFF RECORD Number	DATE	TYPE INST	Q U	V I	RSN CD	SALE PRICE
2627/1458	3/22/2023	WD	Q	I	01	725,000
GRANTOR: PARRIS BETTY						
GRANTEE: DARRAH MONA & ERIC						
0941/0399	7/18/2000	WD	Q	V		32,000
GRANTOR: JONES THOMAS WINSTON						
GRANTEE: PARRIS BETTY						

BUILDING NOTES

EXTRA FEATURES

LN	OB/XF CODE	DESCRIPTION	BLD	CAP	L	W	UNITS	UT	Adj R	ADJ UNIT PRICE	ORIG COND	YEAR ON	YEAR ACTUAL	Q	% COND	OB/XF MKT VALUE	NOTES
1	0812	CONCRETE C	0	100	0	0	1,380.00	SF	4.00	4.00	100	2003	2003	3	84	4,637	
2	0510	GARAGE WD-	0	100	16	20	320.00	SF	35.00	35.00	100	2012	2012	3	71	7,952	
3	0510	GARAGE WD-	0	100	26	30	780.00	SF	35.00	35.00	100	2019	2019	3	93	25,389	
4	0754	FOP	0	100	26	10	260.00	SF	15.00	15.00	100	2019	2019	3	90	3,510	

BUILDING DIMENSIONS

BAS=[YR=2003] W25 S7 W23 S7 W7 S15 E21 UOP=[YR=2003] S22 FOP=[YR=2003] W7 S16 FGR=[YR=2003] W8 S24 E8 S2 E7 N2 E7 N21 E1 FOP=[YR=2003] S2 E7 N5 W6 S3 W1$ E1 N3 W16$ E22 N13 W5 N3 W10$ E10 N2 E4 N2 FOP=[YR=2003] E4 N9 W4 S9$ N12 W3 N5 E1 N1 W1 FOP=[YR=2003] N2 E2 N2 W2 N1 W5 S3 W5 S2 E10$ W11$ E1 N2 E5 N3 E5 S1 E2 S2 W2 S2 E1 S1 W1 S5 E3 S3 E4 S9 W4 S2 W4 S5 E5 S13 E2 S2 E17 N69$.

LAND DESCRIPTION

TOTAL OB/XF 41,488

LN	USE CODE	CLS	LAND USE DESCRIPTION	CAP	RD	LOC ZONE	FRONT	DEPTH	TOT LND UTS	UNIT TYPE	DT	DPTH FACT	% COND	TOT ADJ	UNIT PRICE	ADJ UNIT PRICE	LAND VALUE	OTHER ADJUSTMENTS AND NOTES	YEAR	DENSITY	DECL	FRZ	YR	CONSRV
1	000100	C	SFR	100			0.00	0.00	1.00	LT		1.00	1.00	1.00	120,000.00	120,000.00	120,000							

REVIEW DATE 10/30/2019 BY DJ Total Acres: 0.00 Total Land Value: 120,000 Market: 0 Agricultural: 0 Common: 120,000 PRINTED 08/02/2023 BY SYS