LOT 38
IN OR 681 PG 1978
FLORENCE POINT PB 4/109 & 110

TANT WILLIAM O
5422 MARSH VIEW LANE
FERNANDINA BEACH, FL 32034

2023

00-00-30-0250-0038-0000

BUILDING CHARACTERISTICS

ELEMENT	CD	CONSTRUCTION
Exterior Wall	06	BD/BATTEN 70
Exterior Wall	12	CEDAR 30
Roof Structur	03	GABLE/HIP 100
Roof Cover	03	COMP SHNGL 100
Interior Wall	08	DECORATIVE 100
Interior Floo	14	CARPET 70
Interior Floo	15	HARDTILE 30
Air Condition	03	CENTRAL 100
Heating Type	04	AIR DUCTED 100
Bedrooms		4 100
Bathrooms		2.5 100
Frame	02	WOOD FRAME 100
Stories	2.	2. 100
Units		0 100
BUD8 Adjustme	05	DIST 1A 100
Occupancy	00	NONE 100
Quality	03	Quality Level 03
DOR CODE	0100	SINGLE FAMILY
MAP NUM		MKT AREA 03
NEIGHBORHOOD/LOC	3035.00	

AREA TYPE	TOTAL GROSS AREA	PCT OF BASE	TOT ADJ AREA	SUBAREA MARKET VALUE
BAL	280	15	42	4,034
BAS	1,295	100	1,295	124,381
BAS	651	100	651	62,526
DCK	694	10	69	6,627
FGR	484	55	266	25,548
FOP	86	30	26	2,497
FOP	280	30	84	8,068
FUS	1,027	100	1,027	98,640
FUS	390	100	390	37,458
PTO	132	5	7	672
TOTALS	5,337		3,861	370,838

MARKET ADJUSTMENTS

TYPE	MDL	EFF. AREA	TOT ADJ PTS	EFF. BASE RATE	REPL. COST NEW	AYB	EYB	ECON	FNCT		NORM	% COND
0900	01	3,861	98.9100	117.46	453,513	1986	1995	0	0	0	18.23	81.77

1 SNGL FAM – 100% - 1994 Heated Area: 3363 HX Base Yr 1994

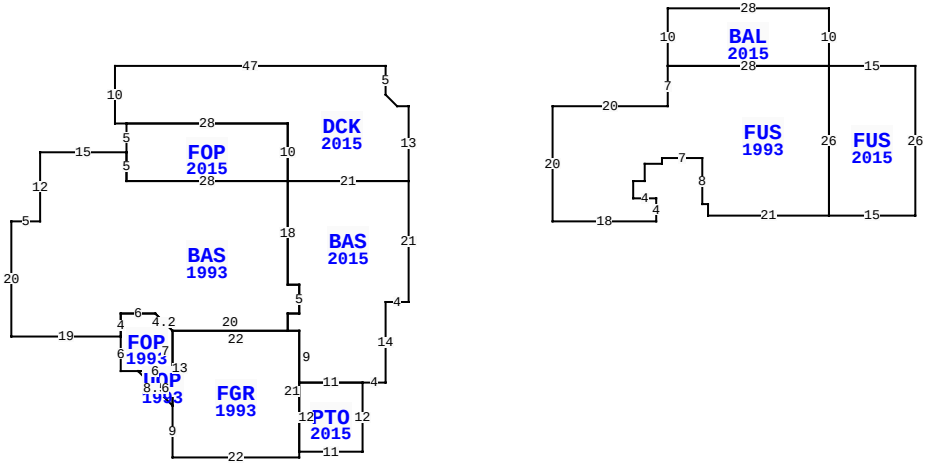

** This building has 11 Sub-Areas

5422 MARSH VIEW LN, FERNANDINA BEACH

BLD DATE		LGL DATE	
XF DATE		LAND DATE	
INC DATE		AG DATE	

NASSAU COUNTY PROPERTY

PAGE 1 of 1 8

VALUATION SUMMARY

VALUATION BY		STANDARD
Tax Group: 8	Tax Dist:	
BUILDING MARKET VALUE		370,838
TOTAL MARKET OB/XF VALUE		14,319
TOTAL LAND VALUE - MARKET		300,000
TOTAL MARKET VALUE		685,157
SOH/AGL Deduction		398,365
ASSESSED VALUE		286,792
TOTAL EXEMPTION VALUE	HX HB	50,000
BASE TAXABLE VALUE		236,792
TOTAL JUST VALUE		685,157
NCON VALUE		0
INCOME VALUE		
PREVIOUS YEAR MKT VALUE		493,200

PERMIT NUM	DESCRIPTION	AMT	ISSUED
B1429258	ADDITION	116,025	09/01/2014

SALES DATA

OFF RECORD Number	DATE	TYPE INST	Q U /	V I /	RSN CD	SALE PRICE
0681/1978	6/01/1993	WD	Q	I		149,900
GRANTOR: GIORDANELLA STEPHEN						
GRANTEE: TANT WILLIAM O						
0427/0579	7/01/1984	WD	Q	V		20,000
GRANTOR:						
GRANTEE:						

BUILDING NOTES

BUILDING DIMENSIONS

DCK=[YR=2015] W2 U2 L2 N5 W47 S10 E2 FOP=[YR=2015] S5 BAS=[YR=1993] W15 S12 W5 S20 E19 FOP=[YR=1993] S6 E3 UOP=[YR=1993] D6 R6 FGR=[YR=1993] S9 E22 N1 PTO=[YR=2015] E11 N12 BAS=[YR=2015] E4 N14 E4 N21 W21 S18 E2 S5 W2 S3 E2 S9 E11$ W11 S12$ N21 W22 S13$ N6 W6$ E6 N7 U3 L3 W6 S4 $ N4 E6 D3 R3 E20 N3 E2 N5 W2 N18 W28 N5$ S5 E28 N10 W28$ E28 S10 E21 N13$ PTR= E25 FUS=[YR=1993] E20N7 BAL=[YR=2015] N10 E28 S10 W28$ E28 FUS=[YR=2015] E15 S26 W15 N26$ S26 W21 N2 W1N8 W7 S1 W3 S3 W2 S3 E4 S4 W18 N20 $ W25 $.

EXTRA FEATURES

L N	OB/XF CODE	DESCRIPTION	BLD	CAP	L	W	UNITS	UT	Adj R	ADJ UNIT PRICE	ORIG COND	YEAR ON	YEAR ACTUAL	Q	% COND	OB/XF MKT VALUE	NOTES
1	0812	CONCRETE C	0	100	0	0	1,695.00	SF	4.00	4.00	100	1986	1986	3	52	3,526	
2	0866	POOL FIBER	0	100	17	32	544.00	SF	72.00	72.00	100	1986	1986	3	20	7,834	
4	0504	FP-ELECTRI	0	100	0	0	1.00	UT	2,000.00	2,000.00	100	1986	1986	3	62	1,240	
5	0845	KOOL DECK	0	100	0	0	456.00	SF	7.25	7.25	100	1986	1986	3	52	1,719	

LAND DESCRIPTION

TOTAL OB/XF 14,319

L N	USE CODE	CLS	LAND USE DESCRIPTION	CAP	R D	LOC ZONE	FRONT	DEPTH	TOT LND UTS	UNIT TYPE	D T	DPTH FACT	% COND	TOT ADJ	UNIT PRICE	ADJ UNIT PRICE	LAND VALUE	OTHER ADJUSTMENTS AND NOTES	YEAR	DENSITY	DECL	FRZ	YR	CONSRV
1	000100	C	SFR	100	0003	RS-1	0.00	0.00	1.00	LT		1.00	1.00	1.00	300,000.00	300,000.00	300,000							

REVIEW DATE 04/23/2020 BY DJA Total Acres: 0.00 Total Land Value: 300,000 Market: 0 Agricultural: 0 Common: 300,000 PRINTED 08/02/2023 BY SYS