LOT 13
FLORENCE POINT PB 4/109 & 110

HYNE CHRISTOPHER M & KATHY LYNN JACOBSEN REVOCABLE
1671 MILLER AVENUE
LOS ALTOS, CA 94024

2023

00-00-30-0250-0013-0000

NASSAU COUNTY PROPERTY

BUILDING CHARACTERISTICS

ELEMENT	CD	CONSTRUCTION
Exterior Wall	12	CEDAR 100
Roof Structur	08	IRREGULAR 100
Roof Cover	03	COMP SHNGL 100
Interior Wall	05	DRYWALL 90
Interior Wall	08	DECORATIVE 10
Interior Floo	11	CLAY TILE 60
Interior Floo	14	CARPET 40
Air Condition	03	CENTRAL 100
Heating Type	04	AIR DUCTED 100
Bedrooms		3 100
Bathrooms		3.5 100
Frame	02	WOOD FRAME 100
Stories	2.	2. 100
Units		0 100
BUD8 Adjustme	05	DIST 1A 100
Quality	03	Quality Level 03
DOR CODE	0100	SINGLE FAMILY
MAP NUM		MKT AREA 03
NEIGHBORHOOD/LOC	3035.00	

AREA TYPE	TOTAL GROSS AREA	PCT OF BASE	TOT ADJ AREA	SUBAREA MARKET VALUE
BAS	1,369	100	1,369	254,343
BAS	60	100	60	11,147
BAS	208	100	208	38,644
DCK	200	10	20	3,716
FGR	570	55	314	58,337
FOP	20	30	6	1,115
FST	36	55	20	3,716
FST	36	55	20	3,716
FST	96	55	53	9,846
FUS	1,121	100	1,121	208,268
TOTALS	3,906		3,229	599,907

MARKET ADJUSTMENTS

TYPE	MDL	EFF. AREA	TOT ADJ PTS	EFF. BASE RATE	REPL. COST NEW	AYB	EYB	ECON	FNCT		NORM	% COND
0500	11	3,229	144.0637	205.29	662,881	1986	2003	0	0	0	9.50	90.50

1 SFR CUST – 100% - 2017 Heated Area: 2758 HX Base Yr 2017

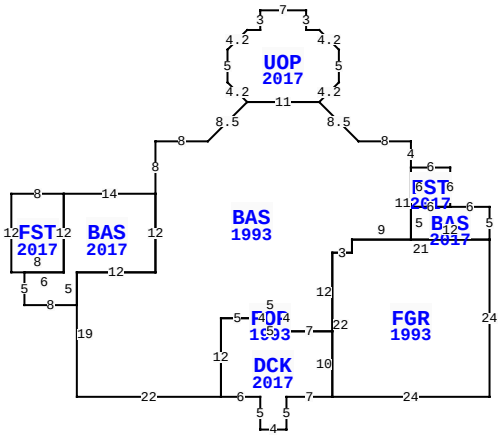

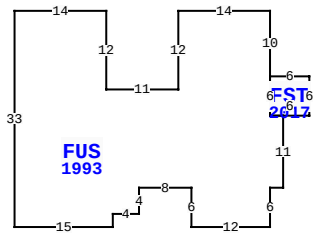

** This building has 11 Sub-Areas

5391 FLORENCE POINT DR, FERNANDINA BEACH

BLD DATE	08/03/2017 DJ	LGL DATE	
XF DATE		LAND DATE	
INC DATE		AG DATE	

NASSAU COUNTY PROPERTY — VALUATION SUMMARY

VALUATION BY		STANDARD
Tax Group: 8	Tax Dist:	
BUILDING MARKET VALUE		599,907
TOTAL MARKET OB/XF VALUE		22,767
TOTAL LAND VALUE - MARKET		526,500
TOTAL MARKET VALUE		1,149,174
SOH/AGL Deduction		524,560
ASSESSED VALUE		624,614
TOTAL EXEMPTION VALUE	HX HB WR	55,000
BASE TAXABLE VALUE		569,614
TOTAL JUST VALUE		1,149,174
NCON VALUE		0
INCOME VALUE		
PREVIOUS YEAR MKT VALUE		801,127

PERMIT NUM	DESCRIPTION	AMT	ISSUED
B1632828	ADDITION	0	08/11/2016
1820	N/A	7,000	06/19/1986

SALES DATA

OFF RECORD Number	DATE	TYPE INST	Q / U	V / I	RSN CD	SALE PRICE
2640/855	5/17/2023	WD	Q	I	01	1,503,500
GRANTOR: POND DANIEL J						
GRANTEE: HYNE CHRISTOPHER M						
2000/0233	8/28/2015	WD	Q	I	01	562,500
GRANTOR: ST GEORGE FAMILY TRUS						
GRANTEE: POND DANIEL J & LIN						

BUILDING NOTES

BUILDING DIMENSIONS

BAS=[YR=2017] W6 FST=[YR=2017] N6 W6 BAS=[YR=1993] N4 W8 U6 L6 UOP=[YR=2017] U3 R3 N5 U3 L3 W2 N3 W7 S3 W2 D3 L3 S5 D3 R3 E11$ W11 D6 L6 W8 S8 BAS=[YR=2017] W14 FST=[YR=2017] W8 S12 E8 N12$ S12 W6 S5 E8 N5 E12 N12$ S12 W12 S19 E22 DCK=[YR=2017] E6 S5 E4 N5 E7 FGR=[YR=1993] E24 N24 W21 S2 W3 S22$ N10 W7 FOP=[YR=1993] N4 W5 S4 E5$ W5 N2 W5 S12$ N12 E5 N2 E5 S4 E7 N12 E3 N2 E9 N11$ S6 E6 $ W6 S5 E12 N5$ PTR= E20 FUS=[YR=1993] E14 S12 E11 N12 E14 S10 FST=[YR=2017] E6 S6 W6 N6$ S6 E2 S11 W2 S6 W12 N6 W8 S4 W4 S2 W15 N33$ W20$.

EXTRA FEATURES

LN	OB/XF CODE	DESCRIPTION	BLD	CAP	L	W	UNITS	UT	Adj R	ADJ UNIT PRICE	ORIG COND	YEAR ON	YEAR ACTUAL	Q	% COND	OB/XF MKT VALUE	NOTES
1	0504	FP-ELECTRI	0	100	0	0	1.00	UT	2,000.00	2,000.00	100	1986	1986	3	62	1,240	
2	0812	CONCRETE C	0	100	0	0	2,537.00	SF	4.00	4.00	100	1986	1986	3	52	5,277	
4	0850	PEBBLE WLK	0	100	0	0	240.00	SF	3.50	3.50	100	1986	1986	3	52	437	
6	0858	SCULP CONC	0	100	0	0	409.00	SF	13.00	13.00	100	1986	1986	3	83	4,413	
7	0410	ELEVATOR	0	100	0	0	1.00	UT	10,000.00	10,000.00	100	2017	2017	3	100	10,000	
8	0810	CONCRETE A	0	100	0	0	222.00	SF	6.50	6.50	100	2017	2017	3	97	1,400	

LAND DESCRIPTION

TOTAL OB/XF 22,767

LN	USE CODE	CLS	LAND USE DESCRIPTION	CAP	RD	LOC ZONE	FRONT	DEPTH	TOT LND UTS	UNIT TYPE	DT	DPTH FACT	% COND	TOT ADJ	UNIT PRICE	ADJ UNIT PRICE	LAND VALUE	OTHER ADJUSTMENTS AND NOTES	YEAR	DENSITY	DECL	FRZ	YR	CONSRV
1	000116	C	SFR MARSH	100		RS-1	117.00	145.00	117.00	FF		1.00	1.00	1.00	4,500.00	4,500.00	526,500							

REVIEW DATE 08/03/2017 BY DJ Total Acres: 0.00 Total Land Value: 526,500 Market: 0 Agricultural: 0 Common: 526,500 PRINTED 08/02/2023 BY SYS