LOT 5
IN OR 724 PG 1598
FLORENCE POINT PB 4/109 & 110

FINOCCHIO FRANK S & CAROLYN B
5341 FLORENCE POINT DRIVE
FERNANDINA BEACH, FL 32034

**2023**

**00-00-30-0250-0005-0000**

## BUILDING CHARACTERISTICS

| ELEMENT | CD | CONSTRUCTION |
|---|---|---|
| Exterior Wall | 12 | CEDAR 100 |
| Roof Structur | 03 | GABLE/HIP 100 |
| Roof Cover | 03 | COMP SHNGL 100 |
| Interior Wall | 05 | DRYWALL 100 |
| Interior Floo | 14 | CARPET 70 |
| Interior Floo | 11 | CLAY TILE 30 |
| Air Condition | 03 | CENTRAL 100 |
| Heating Type | 04 | AIR DUCTED 100 |
| Bedrooms | | 3 100 |
| Bathrooms | | 2 100 |
| Frame | 02 | WOOD FRAME 100 |
| Stories | 2. | 2. 100 |
| Units | | 0 100 |
| BUD8 Adjustme | 05 | DIST 1A 100 |
| Occupancy | 00 | NONE 100 |
| Quality | 03 | Quality Level 03 |
| DOR CODE | 0100 | SINGLE FAMILY |
| MAP NUM | | MKT AREA 03 |
| NEIGHBORHOOD/LOC | 3035.00 | |

| AREA TYPE | TOTAL GROSS AREA | PCT OF BASE | TOT ADJ AREA | SUBAREA MARKET VALUE |
|---|---|---|---|---|
| BAS | 1,301 | 100 | 1,301 | 143,151 |
| DCK | 360 | 10 | 36 | 3,961 |
| FEP | 112 | 80 | 90 | 9,903 |
| FEP | 112 | 80 | 90 | 9,903 |
| FGR | 483 | 55 | 266 | 29,268 |
| FOP | 25 | 30 | 8 | 880 |
| FUS | 698 | 100 | 698 | 76,802 |
| PTO | 25 | 5 | 1 | 110 |
| TOTALS | 3,116 | | 2,490 | 273,979 |

## MARKET ADJUSTMENTS

| TYPE | MDL | EFF. AREA | TOT ADJ PTS | EFF. BASE RATE | REPL. COST NEW | AYB | EYB | ECON | FNCT | | NORM | % COND |
|---|---|---|---|---|---|---|---|---|---|---|---|---|
| 0900 | 01 | 2,490 | 110.3040 | 130.99 | 326,165 | 1986 | 1990 | 0 | 0 | 0 | 16.00 | 84.00 |

1 SNGL FAM – 100% - 2023 Heated Area: 1999 HX Base Yr

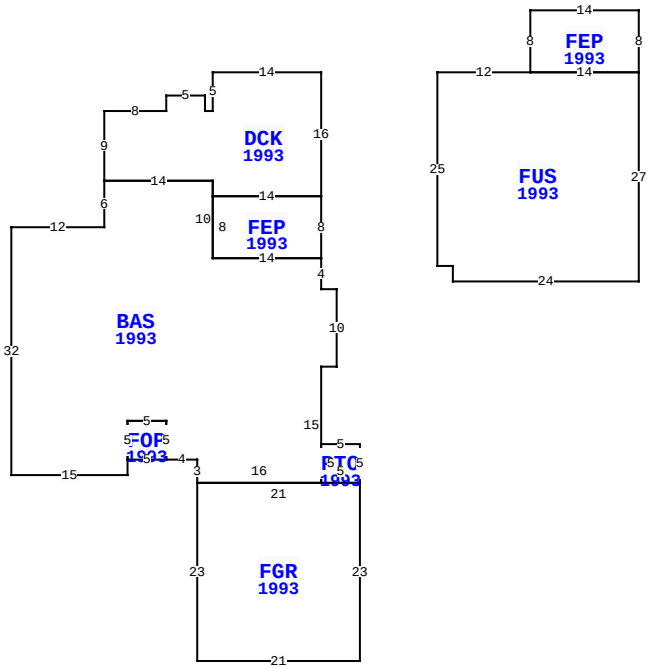


5341 FLORENCE POINT DR, FERNANDINA BEACH

| | | | |
|---|---|---|---|
| BLD DATE | | LGL DATE | |
| XF DATE | | LAND DATE | |
| INC DATE | | AG DATE | |

## NASSAU COUNTY PROPERTY

PAGE 1 of 1 8

### VALUATION SUMMARY

| | | |
|---|---|---|
| VALUATION BY | | STANDARD |
| Tax Group: 8 | Tax Dist: | |
| BUILDING MARKET VALUE | | 273,979 |
| TOTAL MARKET OB/XF VALUE | | 4,706 |
| TOTAL LAND VALUE - MARKET | | 300,000 |
| TOTAL MARKET VALUE | | 578,685 |
| SOH/AGL Deduction | | 0 |
| ASSESSED VALUE | | 578,685 |
| TOTAL EXEMPTION VALUE | 13 | 578,685 |
| BASE TAXABLE VALUE | | 0 |
| TOTAL JUST VALUE | | 578,685 |
| NCON VALUE | | 0 |
| INCOME VALUE | | |
| PREVIOUS YEAR MKT VALUE | | 411,765 |

| PERMIT NUM | DESCRIPTION | AMT | ISSUED |
|---|---|---|---|
| BP 3405 | N/A | 71,594 | 06/06/1986 |

## SALES DATA

| OFF RECORD Number | DATE | TYPE INST | Q U | V I | RSN CD | SALE PRICE |
|---|---|---|---|---|---|---|
| 0724/1598 | 3/02/1995 | WD | Q | I | | 129,000 |
| GRANTOR: TODD ROBERT P & KERRI | | | | | | |
| GRANTEE: FINOCCHIO FRANK & C | | | | | | |
| 0490/0881 | 6/01/1986 | WD | U | V | | 23,000 |
| GRANTOR: | | | | | | |
| GRANTEE: | | | | | | |

## BUILDING NOTES

## BUILDING DIMENSIONS

DCK=[YR=1993] W14 S5 W1 N2 W5 S2 W8 S9 BAS=[YR=1993] S6 W12 S32 E15 N2 FOP=[YR=1993] E5 N5 W5 S5 $ N5 E5 S5 E4 S3 FGR=[YR=1993] S23 E21 N23 PTO=[YR=1993] N5 W5 S5 E5 $ W21 $ E16 N15 E2 N10 W2 N4 FEP=[YR=1993] N8 W14 S8 E14 $ W14 N10 W14 $ E14 S2 E14 N16 $ PTR= E15 FUS=[YR=1993] E12 FEP=[YR=1993] N8 E14 S8 W14 $ E14 S27 W24 N2 W2 N25 $ W15 $ .

## EXTRA FEATURES

| LN | OB/XF CODE | DESCRIPTION | BLD | CAP | L | W | UNITS | UT | Adj R | ADJ UNIT PRICE | ORIG COND | YEAR ON | YEAR ACTUAL | Q | % COND | OB/XF MKT VALUE | NOTES |
|---|---|---|---|---|---|---|---|---|---|---|---|---|---|---|---|---|---|
| 1 | 0500 | FP-PRE FAB | 0 | 100 | 0 | 0 | 1.00 | UT | 3,500.00 | 3,500.00 | 100 | 1986 | 1986 | 3 | 62 | 2,170 | |
| 2 | 0812 | CONCRETE C | 0 | 100 | 53 | 17 | 901.00 | SF | 4.00 | 4.00 | 100 | 1986 | 1986 | 3 | 52 | 1,874 | |
| 3 | 0812 | CONCRETE C | 0 | 100 | 41 | 3 | 123.00 | SF | 4.00 | 4.00 | 100 | 1986 | 1986 | 3 | 52 | 256 | |
| 4 | 1242 | WD DECK A | 0 | 100 | 0 | 0 | 116.00 | SF | 10.00 | 10.00 | 100 | 2007 | 2007 | 3 | 35 | 406 | |

## LAND DESCRIPTION

TOTAL OB/XF 4,706

| LN | USE CODE | CLS | LAND USE DESCRIPTION | CAP | RD | LOC ZONE | FRONT | DEPTH | TOT LND UTS | UNIT TYPE | DT | DPTH FACT | % COND | TOT ADJ | UNIT PRICE | ADJ UNIT PRICE | LAND VALUE | OTHER ADJUSTMENTS AND NOTES | YEAR | DENSITY | DECL | FRZ | YR | CONSRV |
|---|---|---|---|---|---|---|---|---|---|---|---|---|---|---|---|---|---|---|---|---|---|---|---|---|
| 1 | 000100 | C | SFR | 100 | | RS-1 | 0.00 | 0.00 | 1.00 | LT | | 1.00 | 1.00 | 1.00 | 300,000.00 | 300,000.00 | 300,000 | | | | | | | |

REVIEW DATE 01/12/2018 BY DJX Total Acres: 0.00 Total Land Value: 300,000 Market: 0 Agricultural: 0 Common: 300,000 PRINTED 08/02/2023 BY SYS