LOT 50
EGANS BLUFF #3 PB 5/243

GRECO CHRISTOPHER & CATHY S ET AL/CLIFFORD LOUISE
2977 PARK SQUARE PL
FERNANDINA BEACH, FL 32034

2023

00-00-30-021C-0050-0000

BUILDING CHARACTERISTICS

ELEMENT	CD	CONSTRUCTION
Exterior Wall	16	WD FR STUC 100
Roof Structur	03	GABLE/HIP 100
Roof Cover	03	COMP SHNGL 100
Interior Wall	05	DRYWALL 100
Interior Floo	14	CARPET 80
Interior Floo	11	CLAY TILE 20
Air Condition	03	CENTRAL 100
Heating Type	04	AIR DUCTED 100
Bedrooms		4 100
Bathrooms		3 100
Frame	02	WOOD FRAME 100
Stories	1.	1. 100
Units		0 100
Occupancy	00	NONE 100
Quality	06	Quality Level 06
DOR CODE	0100	SINGLE FAMILY
MAP NUM		MKT AREA 02
NEIGHBORHOOD/LOC	2031.00	

AREA TYPE	TOTAL GROSS AREA	PCT OF BASE	TOT ADJ AREA	SUBAREA MARKET VALUE
BAS	2,340	100	2,340	291,648
FGR	493	55	271	33,776
FOP	56	30	17	2,118
FOP	288	30	86	10,718
SFB	210	80	168	20,939
TOTALS	3,387		2,882	359,201

MARKET ADJUSTMENTS

TYPE	MDL	EFF. AREA	TOT ADJ PTS	EFF. BASE RATE	REPL. COST NEW	AYB	EYB	ECON	FNCT		NORM	% COND
0900	01	2,882	120.6396	143.26	412,875	1996	1996	0	0	0	13.00	87.00

1 SNGL FAM – 100% - 2021 Heated Area: 2508 HX Base Yr 2021

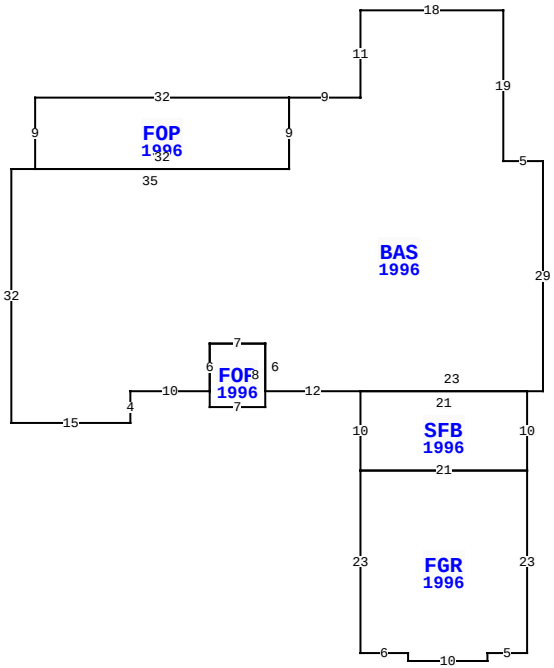

2977 PARK SQUARE PL, FERNANDINA BEACH

BLD DATE		LGL DATE	
XF DATE		LAND DATE	
INC DATE		AG DATE	

NASSAU COUNTY PROPERTY

PAGE 1 of 1 8

VALUATION SUMMARY

VALUATION BY		STANDARD
Tax Group: 8	Tax Dist:	
BUILDING MARKET VALUE		359,201
TOTAL MARKET OB/XF VALUE		20,771
TOTAL LAND VALUE - MARKET		180,000
TOTAL MARKET VALUE		559,972
SOH/AGL Deduction		121,884
ASSESSED VALUE		438,088
TOTAL EXEMPTION VALUE	HX HB	50,000
BASE TAXABLE VALUE		388,088
TOTAL JUST VALUE		559,972
NCON VALUE		0
INCOME VALUE		
PREVIOUS YEAR MKT VALUE		537,602

PERMIT NUM	DESCRIPTION	AMT	ISSUED
B9704338	XFOB	5,564	10/01/1997
B9704245	SWIM POOL	16,000	09/01/1997
B9602634	NEW CONSTR	97,171	03/01/1996

SALES DATA

OFF RECORD Number	DATE	TYPE INST	Q / U	V / I	RSN CD	SALE PRICE
2352/0244	4/03/2020	WD	Q	I	01	585,000
GRANTOR: SKULMIS VILIS H						
GRANTEE: GRECO CHRISTOPHER S						
1969/1766	3/20/2015	WD	Q	I	01	426,500
GRANTOR: STOTZNER WILLIAM T &						
GRANTEE: SKULMIS VILIS H						

BUILDING NOTES

BUILDING DIMENSIONS

BAS=[YR=1996] W18 S11 W9 FOP=[YR=1996] W32 S9 E32 N9$ S9 W35 S32 E15 N4 E10 FOP=[YR=1996] S2 E7 N8 W7 S6$ N6 E7 S6 E12 SFB=[YR=1996] S10 FGR=[YR=1996] S23 E6 S1 E10 N1 E5 N23 W21$ E21 N10 W21$ E23 N29 W5 N19$.

EXTRA FEATURES

LN	OB/XF CODE	DESCRIPTION	BLD	CAP	L	W	UNITS	UT	Adj R	ADJ UNIT PRICE	ORIG COND	YEAR ON	YEAR ACTUAL	Q	% COND	OB/XF MKT VALUE	NOTES
1	0500	FP-PRE FAB	0	100	0	0	1.00	UT	3,500.00	3,500.00	100	1996	1996	3	80	2,800	
2	0812	CONCRETE C	0	100	0	0	1,440.00	SF	4.00	4.00	100	1996	1996	3	73	4,205	
3	0861	POOL GUNIT	0	100	0	0	319.00	SF	85.00	85.00	100	1997	1997	3	21	5,694	
4	0845	KOOL DECK	0	100	0	0	591.00	SF	7.25	7.25	100	1997	1997	3	75	3,214	
5	0910	SCRN RM L	0	100	0	0	966.00	SF	15.00	15.00	100	1997	1997	3	20	2,898	
6	0855	CONC PAVER	0	100	40	5	200.00	SF	10.00	10.00	100	2018	2018	3	98	1,960	

LAND DESCRIPTION

TOTAL OB/XF 20,771

LN	USE CODE	CLS	LAND USE DESCRIPTION	CAP	RD	LOC ZONE	FRONT	DEPTH	TOT LND UTS	UNIT TYPE	DT	DPTH FACT	% COND	TOT ADJ	UNIT PRICE	ADJ UNIT PRICE	LAND VALUE	OTHER ADJUSTMENTS AND NOTES	YEAR	DENSITY	DECL	FRZ	YR	CONSRV
1	000100	C	SFR	100		RS-2	0.00	0.00	1.00	LT		1.00	1.00	1.00	180,000.00	180,000.00	180,000							

REVIEW DATE 03/18/2020 BY DJP Total Acres: 0.00 Total Land Value: 180,000 Market: 0 Agricultural: 0 Common: 180,000 PRINTED 08/02/2023 BY SYS