LOT 9
THE COLONY PB 4/56

1688 PHILIPS MANOR ROAD LLC
650 KENWOOD CT
SATELLITE BEACH, FL 32937

2023

00-00-30-0190-0009-0000

BUILDING CHARACTERISTICS

ELEMENT	CD	CONSTRUCTION
Exterior Wall	05	AVERAGE 100
Roof Structur	03	GABLE/HIP 100
Roof Cover	01	MINIMUM 100
Interior Wall	05	DRYWALL 100
Interior Floo	14	CARPET 80
Interior Floo	08	SHT VINYL 20
Air Condition	03	CENTRAL 100
Heating Type	04	AIR DUCTED 100
Bedrooms		4 100
Bathrooms		2 100
Frame	02	WOOD FRAME 100
Stories	1.	1. 100
Units		0 100
BUD8 Adjustme	05	DIST 1A 100
Occupancy	00	NONE 100
Quality	03	Quality Level 03
DOR CODE	0100	SINGLE FAMILY
MAP NUM		MKT AREA 03
NEIGHBORHOOD/LOC	3029.00	

AREA TYPE	TOTAL GROSS AREA	PCT OF BASE	TOT ADJ AREA	SUBAREA MARKET VALUE
BAS	2,008	100	2,008	146,801
FOP	272	30	82	5,995
FST	28	55	15	1,097
UOP	120	20	24	1,754
TOTALS	2,428		2,129	155,646

MARKET ADJUSTMENTS

TYPE	MDL	EFF. AREA	TOT ADJ PTS	EFF. BASE RATE	REPL. COST NEW	AYB	EYB	ECON	FNCT		NORM	% COND
0100	01	2,129	100.9400	91.10	193,952	1972	1972	0	0	0	19.75	80.25

1 SINGLE FAM – 0% - 0 Heated Area: 2008 HX Base Yr

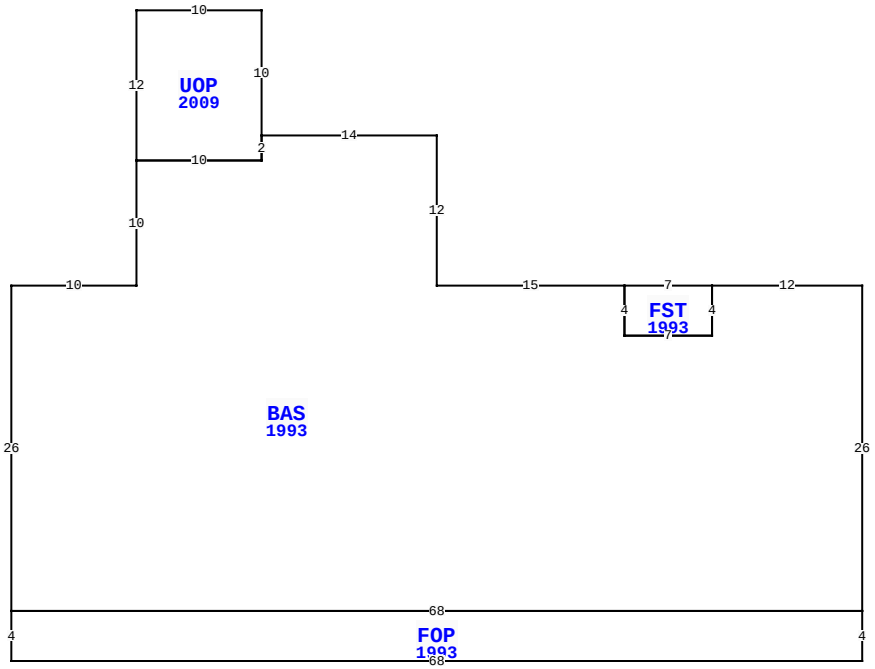

1688 PHILIPS MANOR RD, FERNANDINA BEACH

BLD DATE		LGL DATE	
XF DATE		LAND DATE	
INC DATE		AG DATE	

NASSAU COUNTY PROPERTY

PAGE 1 of 2 8

VALUATION SUMMARY

VALUATION BY	STANDARD
Tax Group: 8	Tax Dist:
BUILDING MARKET VALUE	173,390
TOTAL MARKET OB/XF VALUE	1,628
TOTAL LAND VALUE - MARKET	187,500
TOTAL MARKET VALUE	362,518
SOH/AGL Deduction	28,676
ASSESSED VALUE	333,842
TOTAL EXEMPTION VALUE	0
BASE TAXABLE VALUE	333,842
TOTAL JUST VALUE	362,518
NCON VALUE	0
INCOME VALUE	
PREVIOUS YEAR MKT VALUE	351,463

PERMIT NUM	DESCRIPTION	AMT	ISSUED
B9805648	NEW CONSTR	22,500	12/01/1998
0128	REPAIR/RRF	2,900	10/01/1993

SALES DATA

OFF RECORD Number	DATE	TYPE INST	Q / U	V / I	RSN CD	SALE PRICE
2388/0499	8/31/2020	WD	Q	I	01	287,000
GRANTOR: WILLIAMS QUINNIE R						
GRANTEE: 1688 PHILIPS MANOR						
0973/1901	3/07/2001	QC	U	I	01	100
GRANTOR: LAYLAND JEAN W						
GRANTEE: WILLIAMS QUINNIE R						

BUILDING NOTES

BUILDING DIMENSIONS

BAS=[YR=1993] W12 FST=[YR=1993] W7 S4 E7 N4 $ S4 W7 N4 W15 N12 W14 UOP=[YR=2009] N10 W10 S12 E10 N2 $ S2 W10 S10 W10 S26 FOP=[YR=1993] S4 E68 N4 W68 $ E68 N26 $.

EXTRA FEATURES

LN	OB/XF CODE	DESCRIPTION	BLD	CAP	L	W	UNITS	UT	Adj R	ADJ UNIT PRICE	ORIG COND	YEAR ON	YEAR ACTUAL	Q	% COND	OB/XF MKT VALUE	NOTES
1	0811	CONCRETE B	0	0	0	0	507.00	SF	5.20	5.20	100	1972	1972	3	24	633	
2	0810	CONCRETE A	0	0	0	0	247.00	SF	6.50	6.50	100	1990	1990	3	62	995	

LAND DESCRIPTION

TOTAL OB/XF 1,628

LN	USE CODE	CLS	LAND USE DESCRIPTION	CAP	RD	LOC ZONE	FRONT	DEPTH	TOT LND UTS	UNIT TYPE	DT	DPTH FACT	% COND	TOT ADJ	UNIT PRICE	ADJ UNIT PRICE	LAND VALUE	OTHER ADJUSTMENTS AND NOTES	YEAR	DENSITY	DECL	FRZ	YR	CONSRV
1	000100	C	SFR	0	0006	RS-2	0.00	0.00	1.00	LT		1.00	1.00	0.75	250,000.00	187,500.00	187,500							

REVIEW DATE 04/09/2020 BY DJA Total Acres: 0.00 Total Land Value: 187,500 Market: 0 Agricultural: 0 Common: 187,500 PRINTED 08/02/2023 BY SYS

LOT 9
THE COLONY PB 4/56

1688 PHILIPS MANOR ROAD LLC
650 KENWOOD CT
SATELLITE BEACH, FL 32937

2023

00-00-30-0190-0009-0000

BUILDING CHARACTERISTICS

ELEMENT	CD	CONSTRUCTION
Exterior Wall	15	CONC BLOCK 60
Exterior Wall	05	AVERAGE 40
Roof Structur	03	GABLE/HIP 100
Roof Cover	03	COMP SHNGL 100
Interior Wall	02	WALL BD/WD 100
Interior Floo	03	CONC FINSH 100
Air Condition	01	NONE 100
Heating Type	01	NONE 100
Bedrooms		0 100
Bathrooms		0 100
Frame	02	WOOD FRAME 100
Stories	1.	1. 100
Units		0 100
Occupancy	00	NONE 100
Quality	03	Quality Level 03
DOR CODE	0100	SINGLE FAMILY
MAP NUM		MKT AREA 03
NEIGHBORHOOD/LOC	3029.00	

AREA TYPE	TOTAL GROSS AREA	PCT OF BASE	TOT ADJ AREA	SUBAREA MARKET VALUE
BAS	900	100	900	13,198
UOP	51	20	10	147
UUS	600	50	300	4,399
TOTALS	1,551		1,210	17,744

MARKET ADJUSTMENTS

TYPE	MDL	EFF. AREA	TOT ADJ PTS	EFF. BASE RATE	REPL. COST NEW	AYB	EYB	ECON	FNCT		NORM	% COND
6500	01	1,210	64.4480	22.56	27,298	2000	2000	0	0	0	35.00	65.00

2 GARAGE RES – 0% - 0 Heated Area: 900 HX Base Yr

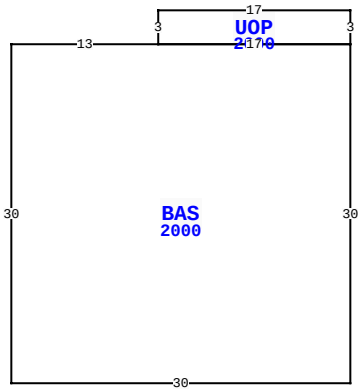

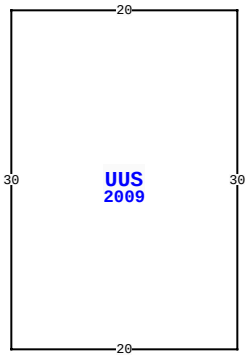

1688 PHILIPS MANOR RD, FERNANDINA BEACH

BLD DATE		LGL DATE	
XF DATE		LAND DATE	
INC DATE		AG DATE	

NASSAU COUNTY PROPERTY

PAGE 2 of 2 8

VALUATION SUMMARY

VALUATION BY	STANDARD
Tax Group: 8	Tax Dist:
BUILDING MARKET VALUE	173,390
TOTAL MARKET OB/XF VALUE	1,628
TOTAL LAND VALUE - MARKET	187,500
TOTAL MARKET VALUE	362,518
SOH/AGL Deduction	28,676
ASSESSED VALUE	333,842
TOTAL EXEMPTION VALUE	0
BASE TAXABLE VALUE	333,842
TOTAL JUST VALUE	362,518
NCON VALUE	0
INCOME VALUE	
PREVIOUS YEAR MKT VALUE	351,463

PERMIT NUM	DESCRIPTION	AMT	ISSUED

SALES DATA

OFF RECORD Number	DATE	TYPE INST	Q / U	V / I	RSN CD	SALE PRICE
2388/0499	8/31/2020	WD	Q	I	01	287,000
GRANTOR: WILLIAMS QUINNIE R						
GRANTEE: 1688 PHILIPS MANOR						
0973/1901	3/07/2001	QC	U	I	01	100
GRANTOR: LAYLAND JEAN W						
GRANTEE: WILLIAMS QUINNIE R						

BUILDING NOTES

BUILDING DIMENSIONS

UOP=[YR=2000] W17 S3 BAS=[YR=2000] W13 S30 E30 N30 W17 $
E17 N3 $ PTR= E30 UUS=[YR=2009] E20 S30 W20 N30 $ W30 $.

EXTRA FEATURES

L N	OB/XF CODE	DESCRIPTION	BLD	CAP	L	W	UNITS	UT	Adj R	ADJ UNIT PRICE	ORIG COND	YEAR ON	YEAR ACTUAL	Q	% COND	OB/XF MKT VALUE	NOTES

LAND DESCRIPTION

TOTAL OB/XF 0

L N	USE CODE	CLS	LAND USE DESCRIPTION	CAP	R D	LOC ZONE	FRONT	DEPTH	TOT LND UTS	UNIT TYPE	D T	DPTH FACT	% COND	TOT ADJ	UNIT PRICE	ADJ UNIT PRICE	LAND VALUE	OTHER ADJUSTMENTS AND NOTES	YEAR	DENSITY	DECL	FRZ	YR	CONSRV

REVIEW DATE 04/09/2020 BY DJA Total Acres: 0.00 Total Land Value: 187,500 Market: 0 Agricultural: 0 Common: 187,500 PRINTED 08/02/2023 BY SYS