LOT 4 & N1/2 OF LOT 5
CASHEN PARK SUB PB 2/49

MARENGHI LISA L/E/
802 CASHEN DR
FERNANDINA BEACH, FL 32034

2023

00-00-30-0170-0004-0000

BUILDING CHARACTERISTICS

ELEMENT	CD	CONSTRUCTION
Exterior Wall	05	AVERAGE 50
Exterior Wall	07	ASB SHNGLE 50
Roof Structur	03	GABLE/HIP 100
Roof Cover	12	MODULAR MT 100
Interior Wall	05	DRYWALL 100
Interior Floo	12	HARDWOOD 100
Air Condition	03	CENTRAL 100
Heating Type	04	AIR DUCTED 100
Bedrooms		0 100
Bathrooms		1 100
Frame	02	WOOD FRAME 100
Stories	1.	1. 100
Units		0 100
BUD8 Adjustme	05	DIST 1A 100
Occupancy	00	NONE 100
Quality	04	Quality Level 04
DOR CODE	0100	SINGLE FAMILY
MAP NUM		MKT AREA 02
NEIGHBORHOOD/LOC	2001.00	

AREA TYPE	TOTAL GROSS AREA	PCT OF BASE	TOT ADJ AREA	SUBAREA MARKET VALUE
BAS	760	100	760	66,098
BAS	240	100	240	20,873
FOP	40	30	12	1,044
FST	72	55	40	3,479
PTO	139	5	7	609
UDG	234	55	129	11,220
TOTALS	1,485		1,188	103,322

MARKET ADJUSTMENTS

TYPE	MDL	EFF. AREA	TOT ADJ PTS	EFF. BASE RATE	REPL. COST NEW	AYB	EYB	ECON	FNCT		NORM	% COND
0100	01	1,188	115.7520	104.47	124,110	1940	1995	0	0	0	16.75	83.25

1 SINGLE FAM – 100% - 2016 Heated Area: 1000 HX Base Yr 2016

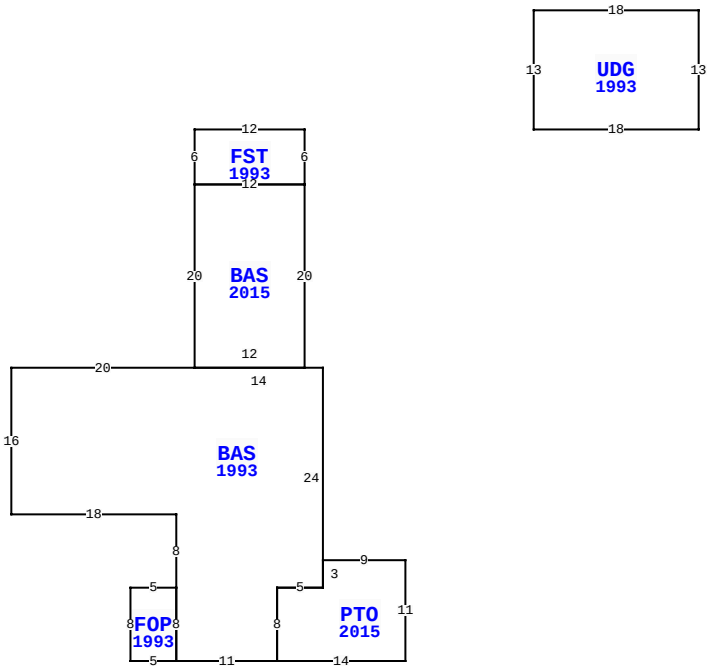

802 CASHEN DR, FERNANDINA BEACH

BLD DATE		LGL DATE	
XF DATE		LAND DATE	
INC DATE		AG DATE	

NASSAU COUNTY PROPERTY

PAGE 1 of 1 8

VALUATION SUMMARY

VALUATION BY		STANDARD
Tax Group: 8	Tax Dist:	
BUILDING MARKET VALUE		103,322
TOTAL MARKET OB/XF VALUE		0
TOTAL LAND VALUE - MARKET		132,000
TOTAL MARKET VALUE		235,322
SOH/AGL Deduction		110,192
ASSESSED VALUE		125,130
TOTAL EXEMPTION VALUE	HX HB	50,000
BASE TAXABLE VALUE		75,130
TOTAL JUST VALUE		235,322
NCON VALUE		0
INCOME VALUE		
PREVIOUS YEAR MKT VALUE		240,124

PERMIT NUM	DESCRIPTION	AMT	ISSUED

SALES DATA

OFF RECORD Number	DATE	TYPE INST	Q / U	V / I	RSN CD	SALE PRICE
2632/229	4/18/2023	LE	U	I	11	100
GRANTOR: MARENGHI LISA S						
GRANTEE: PRONOVOST MICHAEL S						
2001/0720	8/27/2015	WD	Q	I	01	133,000
GRANTOR: LAW KEVIN & BRIANA DU						
GRANTEE: MARENGHI LISA						

BUILDING NOTES

BUILDING DIMENSIONS

FST=[YR=1993] W12 S6 BAS=[YR=2015] S20 BAS=[YR=1993] W20 S16 E18 S8 FOP=[YR=1993] W5S8E5N8$ S8 E11 PTO=[YR=2015] E14 N11 W9S3 W5S8$ N8 E5 N24 W14$ E12 N20 W12$ E12 N6$ PTR=E25 UDG=[YR=1993] E18 N13 W18S13$ W25$.

EXTRA FEATURES

L N	OB/XF CODE	DESCRIPTION	BLD	CAP	L	W	UNITS	UT	Adj R	ADJ UNIT PRICE	ORIG COND	YEAR ON	YEAR ACTUAL	Q	% COND	OB/XF MKT VALUE	NOTES

LAND DESCRIPTION

TOTAL OB/XF 0

L N	USE CODE	CLS	LAND USE DESCRIPTION	CAP	R D	LOC ZONE	FRONT	DEPTH	TOT LND UTS	UNIT TYPE	D T	DPTH FACT	% COND	TOT ADJ	UNIT PRICE	ADJ UNIT PRICE	LAND VALUE	OTHER ADJUSTMENTS AND NOTES	YEAR	DENSITY	DECL	FRZ	YR	CONSRV
1	000100	C	SFR	100		RM	110.00	180.00	110.00	FF		1.00	1.00	1.00	1,200.00	1,200.00	132,000							

REVIEW DATE 07/29/2022 BY KBA Total Acres: 0.00 Total Land Value: 132,000 Market: 0 Agricultural: 0 Common: 132,000 PRINTED 08/02/2023 BY SYS