BLOCK 1 LOT 26
IN OR 2075/480
AMERICAN BEACH 3 UNIT 1

MCCULLOCH WILLIAM C III & AMY CHRISTINE
5610 GREGG ST
FERNANDINA BEACH, FL 32034

2023

00-00-30-010C-0001-0260

NASSAU COUNTY PROPERTY

BUILDING CHARACTERISTICS

ELEMENT	CD	CONSTRUCTION
Exterior Wall	10	ABOVE AVG 100
Roof Structur	08	IRREGULAR 100
Roof Cover	12	MODULAR MT 100
Interior Wall	05	DRYWALL 100
Interior Floo	11	CLAY TILE 100
Air Condition	03	CENTRAL 100
Heating Type	04	AIR DUCTED 100
Bedrooms		3 100
Bathrooms		3.5 100
Frame	03	MASONRY 100
Stories	3.	3. 100
Units		0 100
Occupancy	00	NONE 100
Quality	04	Quality Level 04
DOR CODE	0100	SINGLE FAMILY
MAP NUM		MKT AREA 03
NEIGHBORHOOD/LOC	3038.00	

AREA TYPE	TOTAL GROSS AREA	PCT OF BASE	TOT ADJ AREA	SUBAREA MARKET VALUE
BAL	120	15	18	2,842
BAS	770	100	770	121,584
FGR	678	55	373	58,897
FOP	117	30	35	5,526
FOP	190	30	57	9,000
FOP	190	30	57	9,000
FOP	190	30	57	9,000
FOP	192	30	58	9,158
FOP	240	30	72	11,369
FUS	1,426	100	1,426	225,167
TOTALS	5,683		4,363	688,923

MARKET ADJUSTMENTS

TYPE	MDL	EFF. AREA	TOT ADJ PTS	EFF. BASE RATE	REPL. COST NEW	AYB	EYB	ECON	FNCT		NORM	% COND
0500	01	4,363	113.6520	161.95	706,588	2016	2016	0	0	0	2.50	97.50

1 SFR CUST – 100% - 2017 Heated Area: 3622 HX Base Yr 2017

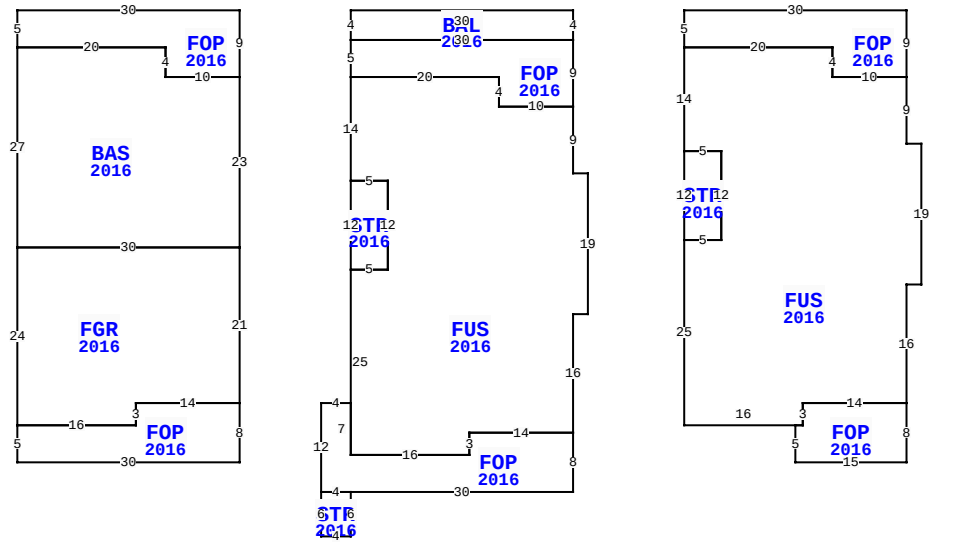

** This building has 14 Sub-Areas

5610 GREGG ST, FERNANDINA BEACH

BLD DATE		LGL DATE	
XF DATE		LAND DATE	
INC DATE		AG DATE	

VALUATION SUMMARY

VALUATION BY		STANDARD
Tax Group: 8	Tax Dist:	
BUILDING MARKET VALUE		688,923
TOTAL MARKET OB/XF VALUE		10,522
TOTAL LAND VALUE - MARKET		800,000
TOTAL MARKET VALUE		1,499,445
SOH/AGL Deduction		614,897
ASSESSED VALUE		884,548
TOTAL EXEMPTION VALUE	HX HB	50,000
BASE TAXABLE VALUE		834,548
TOTAL JUST VALUE		1,499,445
NCON VALUE		0
INCOME VALUE		
PREVIOUS YEAR MKT VALUE		1,241,390

PERMIT NUM	DESCRIPTION	AMT	ISSUED
B1529860	CO ISSUED	0	08/03/2016
B1529860	NEW CONSTR	421,980	01/01/2015

SALES DATA

OFF RECORD Number	DATE	TYPE INST	Q U	V I	RSN CD	SALE PRICE
2075/0480	9/29/2016	WD	U	I	30	208,500
GRANTOR: MCCULLOCH WILLIAM CHR						
GRANTEE: MCCULLOCH WILLIAM C						
1959/1043	1/22/2015	QC	U	V	11	100
GRANTOR: WILLIAM C MCCULLOCH E						
GRANTEE: MCCULLOCH WILLIAM C						

BUILDING NOTES

BUILDING DIMENSIONS

FOP=[YR=2016] W30 S5 BAS=[YR=2016] S27 FGR=[YR=2016] S24 FOP=[YR=2016] S5 E30 N8 W14 S3 W16$ E16 N3 E14 N21 W30 $ E30 N23 W10 N4 W20$ E20 S4 E10 N9$ PTR=E15 BAL=[YR=2016] E30 S4 FOP=[YR=2016] S9 FUS=[YR=2016] S9 E2 S19 W2 S16 FOP=[YR=2016] S8 W30 STR=[YR=2016] S6 W4 N6 E4$ W4 N12 E4 S7 E16 N3 E14$ W14 S3 W16 N25 STR=[YR=2016] N12 E5 S12 W5$ E5 N12 W5 N14 E20 S4 E10$ W10 N4 W20 N5 E30$ W30 N4$ W15$ PTR=E60 FOP=[YR=2016] E30 S9 FUS=[YR=2016] S9 E2 S19 W2 S16 FOP=[YR=2016] S8 W15 N5 E1 N3 E14$ W14 S3 W16 N25 STR=[YR=2016] N12 E5 S12 W5$ E5 N12 W5 N14 E20 S4 E10$ W10 N4 W20 N5$ W60$.

EXTRA FEATURES

LN	OB/XF CODE	DESCRIPTION	BLD	CAP	L	W	UNITS	UT	Adj R	ADJ UNIT PRICE	ORIG COND	YEAR ON	YEAR ACTUAL	Q	% COND	OB/XF MKT VALUE	NOTES
1	0504	FP-ELECTRI	0	100	0	0	1.00	UT	2,000.00	2,000.00	100	2016	2016	3	98	1,960	
2	0855	CONC PAVER	0	100	0	0	1,023.00	SF	7.00	7.00	100	2016	2016	3	97	6,946	
3	0855	CONC PAVER	0	100	0	0	238.00	SF	7.00	7.00	100	2016	2016	3	97	1,616	

LAND DESCRIPTION

TOTAL OB/XF 10,522

LN	USE CODE	CLS	LAND USE DESCRIPTION	CAP	RD	LOC ZONE	FRONT	DEPTH	TOT LND UTS	UNIT TYPE	DT	DPTH FACT	% COND	TOT ADJ	UNIT PRICE	ADJ UNIT PRICE	LAND VALUE	OTHER ADJUSTMENTS AND NOTES	YEAR	DENSITY	DECL	FRZ	YR	CONSRV
1	000120	C	SFR OCN FT	100		RS-2	50.00	155.00	50.00	FF		1.00	1.00	1.00	16,000.00	16,000.00	800,000							

REVIEW DATE 07/29/2022 BY KBA Total Acres: 0.00 Total Land Value: 800,000 Market: 0 Agricultural: 0 Common: 800,000 PRINTED 08/02/2023 BY SYS