BLOCK 9 LOT 72
AMERICAN BEACH SUB 1
PB 2/42

SHIPYAN ANTHONY M/MATHEWS RUTH E
5436 PRICE STREET
FERNANDINA BEACH, FL 32034

2023

00-00-30-010A-0009-0720

BUILDING CHARACTERISTICS

ELEMENT	CD	CONSTRUCTION
Exterior Wall	10	ABOVE AVG 100
Roof Structur	03	GABLE/HIP 100
Roof Cover	03	COMP SHNGL 100
Interior Wall	05	DRYWALL 100
Interior Floo	13	LVT/LAMNT 100
Air Condition	03	CENTRAL 100
Heating Type	04	AIR DUCTED 100
Bedrooms		2 100
Bathrooms		2 100
Frame	02	WOOD FRAME 100
Stories	2.	2. 100
Units		0 100
Occupancy	00	NONE 100
Quality	04	Quality Level 04

DOR CODE 0100 SINGLE FAMILY
MAP NUM | MKT AREA 03
NEIGHBORHOOD/LOC 3038.00

AREA TYPE	TOTAL GROSS AREA	PCT OF BASE	TOT ADJ AREA	SUBAREA MARKET VALUE
BAS	1,504	100	1,504	203,779
FGR	957	55	526	71,268
FOP	151	30	45	6,097
FSP	462	40	185	25,066
STR	42	10	4	542
TOTALS	3,116		2,264	306,752

MARKET ADJUSTMENTS

TYPE	MDL	EFF. AREA	TOT ADJ PTS	EFF. BASE RATE	REPL. COST NEW	AYB	EYB	ECON	FNCT		NORM	% COND
0900	01	2,264	115.2480	136.86	309,851	2019	2019	0	0	0	1.00	99.00

2 SNGL FAM – 100% - 2020 Heated Area: 1504 HX Base Yr 2020

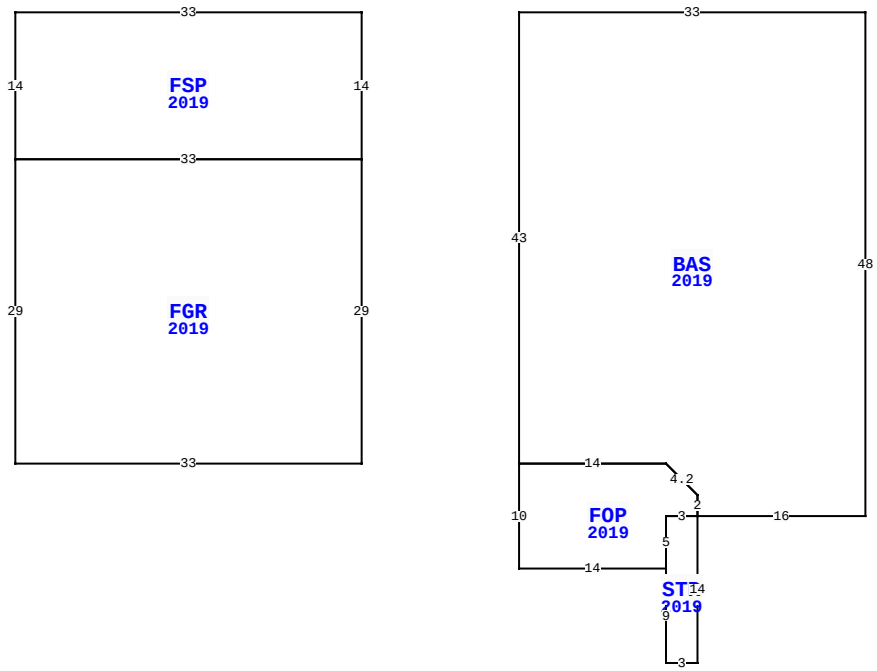

5436 PRICE ST, FERNANDINA BEACH

BLD DATE		LGL DATE	
XF DATE		LAND DATE	
INC DATE		AG DATE	

NASSAU COUNTY PROPERTY

PAGE 1 of 1 8

VALUATION SUMMARY

VALUATION BY		STANDARD
Tax Group: 8	Tax Dist:	
BUILDING MARKET VALUE		306,752
TOTAL MARKET OB/XF VALUE		2,162
TOTAL LAND VALUE - MARKET		300,000
TOTAL MARKET VALUE		608,914
SOH/AGL Deduction		297,999
ASSESSED VALUE		310,915
TOTAL EXEMPTION VALUE	HX HB	50,000
BASE TAXABLE VALUE		260,915
TOTAL JUST VALUE		608,914
NCON VALUE		0
INCOME VALUE		
PREVIOUS YEAR MKT VALUE		447,935

PERMIT NUM	DESCRIPTION	AMT	ISSUED
C1900287	CO ISSUED	0	01/10/2019
B1804783	NEW CONSTR	238,447	05/10/2018
17005772	DEMOLITION	0	06/28/2017

SALES DATA

OFF RECORD Number	DATE	TYPE INST	Q U	V I	RSN CD	SALE PRICE
2122/1938	5/30/2017	WD	Q	V	01	90,000
GRANTOR: WATSON JAMES H TRUSTE						
GRANTEE: SHIPYAN ANTHONY M &						
2036/1072	2/25/2016	SW	U	I	11	100
GRANTOR: WATSON JAMES & BRENDA						
GRANTEE: WATSON TRUST						

BUILDING NOTES

BUILDING DIMENSIONS

FSP=[YR=2019] W33 S14 FGR=[YR=2019] S29 E33 N29 W33$ E33 N14$ PTR=E15 BAS=[YR=2019] E33 S48 W16 STR=[YR=2019] S14 W3 N9 FOP=[YR=2019] W14 N10 E14 D3 R3 S2 W3 S5$ N5 E3$ N2 U3 L3 W14 N43$ W15$.

EXTRA FEATURES

LN	OB/XF CODE	DESCRIPTION	BLD	CAP	L	W	UNITS	UT	Adj R	ADJ UNIT PRICE	ORIG COND	YEAR ON	YEAR ACTUAL	Q	% COND	OB/XF MKT VALUE	NOTES
1	0810	CONCRETE A	0	100	0	0	336.00	SF	6.50	6.50	100	2019	2019	3	99	2,162	

LAND DESCRIPTION

TOTAL OB/XF 2,162

LN	USE CODE	CLS	LAND USE DESCRIPTION	CAP	RD	LOC ZONE	FRONT	DEPTH	TOT LND UTS	UNIT TYPE	DT	DPTH FACT	% COND	TOT ADJ	UNIT PRICE	ADJ UNIT PRICE	LAND VALUE	OTHER ADJUSTMENTS AND NOTES	YEAR	DENSITY	DECL	FRZ	YR	CONSRV
1	000100	C	SFR	100		RS-2	50.00	100.00	50.00	FF		1.00	1.00	1.00	6,000.00	6,000.00	300,000							

REVIEW DATE 04/22/2019 BY DJ Total Acres: 0.00 Total Land Value: 300,000 Market: 0 Agricultural: 0 Common: 300,000 PRINTED 08/02/2023 BY SYS